# MARC PHASE 1 OFFICE RENOVATION

## 600 BROADWAY BLVD STE 200, KANSAS CITY, MO 64105

MARC
Mid-America Regional Council


**OWNER**
MID-AMERICA REGIONAL COUNCIL
600 BROADWAY BLVD STE 200
KANSAS CITY, MO 64105


| | |
|---|---|
| **A** | |
| A/C | AIR CONDITIONING |
| AD | AREA DRAIN |
| ADA | AMERICANS WITH DISABILITIES ACT |
| ADAAG | ADA ACCESSIBILITY GUIDELINES |
| ADDL | ADDITIONAL |
| ADJ | ADJUSTABLE |
| AFF | ABOVE FINISH FLOOR |
| ALT | ALTERNATE |
| ALUM | ALUMINUM |
| APPROX | APPROXIMATE |
| ARCH | ARCHITECTURAL |
| AV | AUDIO VISUAL |
| **B** | |
| B/ | BOTTOM OF (SEE OTHER WORD) |
| BLDG | BUILDING |
| BSMT | BASEMENT |
| **C** | |
| CAB | CABINET |
| CAT | CATEGORY |
| CB | CATCH BASIN |
| CI | CAST IRON |
| CIP | CAST-IN-PLACE |
| CJ | CONTROL JOINT / CONSTRUCTION JOINT |
| CL | CENTER LINE |
| CLG | CEILING |
| CLR | CLEAR |
| CM | CENTIMETER |
| CMB | CEMENT BOARD |
| CMU | CONCRETE MASONRY UNIT |
| CO | CLEANOUT |
| COL | COLUMN |
| CONC | CONCRETE |
| CONT | CONTINUOUS |
| COORD | COORDINATE |
| CORR | CORRIDOR |
| CS | CONCRETE SEALER |
| CTR | CENTER |
| **D** | |
| DB | DECIBEL |
| DEG | DEGREE |
| DEMO | DEMOLITION |
| DEPT | DEPARTMENT |
| DET | DETAIL |
| DF | DRINKING FOUNTAIN |
| DIA | DIAMETER |
| DIFF | DIFFUSER |
| DIM | DIMENSION |
| DL | DEAD LOAD |
| DN | DOWN |
| DR | DOOR |
| DRN | DRAIN |
| DW | DISHWASHER |
| DWG | DRAWING |
| **E** | |
| EA | EACH |
| EFS | EXTERIOR FINISH SYSTEM |
| EIFS | EXTERIOR INSULATION AND FINISH SYSTEM |
| EL | ELEVATION |
| ELEC | ELECTRICAL |
| EMERG | EMERGENCY |
| ENCL | ENCLOSURE |
| EP | ELECTRICAL PANELBOARD |
| EQ | EQUAL |
| EQUIP | EQUIPMENT |
| EWC | ELECTRICAL WATER COOLER |
| EXH | EXHAUST |
| EXIST | EXISTING |
| EXP | EXPANSION |
| EXT | EXTERIOR |
| **F** | |
| F/ | FACE OF (SEE OTHER WORD) |
| FA | FIRE ALARM |
| FD | FLOOR DRAIN |
| FDC | FIRE DEPARTMENT CONNECTION |
| FDN | FOUNDATION |
| FE | FIRE EXTINGUISHER |
| FEC | FIRE EXTINGUISHER CABINET |
| FEQ | FOOD EQUIPMENT |
| FF | FINISH FLOOR |
| FF&E | FURNITURE, FIXTURES & EQUIPMENT |
| FHC | FIRE HOSE CABINET |
| FIN | FINISH |
| FL | FLOOR |
| FLOUR | FLUORESCENT |
| FO | FINISHED OPENING |
| FRTW | FIRE RETARDANT TREATED WOOD |
| FS | FIRE STOPPING |
| FT | FEET/FOOT |
| FTG | FOOTING |
| FURN | FURNITURE |
| **G** | |
| GA | GAUGE / GAGE |
| GALV | GALVANIZED |
| GC | GENERAL CONTRACTOR, GENERAL CONTRACT |
| GFRC | GLASS FIBER REINFORCED CONCRETE |
| GFRG | GLASS FIBER REINFORCED GYPSUM |
| GFRP | GLASS FIBER REINFORCED PLASTIC |
| GR | GRADE |
| GWB | GYPSUM WALLBOARD |
| **H** | |
| HB | HOSE BIBB |
| HC | HANDICAPPED |
| HM | HOLLOW METAL |
| HO | HOLD-OPEN |
| HORIZ | HORIZONTAL |
| HP | HIGH POINT |
| HR | HOUR |
| HRC | HOSE REEL CABINET |
| HSS | HOLLOW STRUCTURAL SECTION |
| HT | HEIGHT |
| HVAC | HEATING, VENTILATING, AIR CONDITIONING |
| HW | HOT WATER |
| **I** | |
| ICB | INTEGRAL COVE BASE |
| ICC | INTERNATIONAL CODE COUNCIL |
| ID | INSIDE DIAMETER / DIMENSION |
| IN | INCH |
| INFO | INFORMATION |
| INT | INTERIOR |
| INV | INVERT |
| **J** | |
| JC | JANITOR'S CLOSET |
| JST | JOIST |
| JT | JOINT |
| **K** | |
| K | KIP (1000 LB) |
| KG | KILOGRAM |
| KIT | KITCHEN |
| **L** | |
| LAB | LABORATORY |
| LAT | LATERAL |
| LAV | LAVATORY |
| LB | POUND |
| LF | LINEAR FOOT |
| LL | LIVE LOAD |
| LLH | LONG LEG HORIZONTAL |
| LLV | LONG LEG VERTICAL |
| LP | LOW VOLTAGE |
| LT | LIGHT |
| LV | LOW VOLTAGE |
| **M** | |
| M | METER |
| MAINT | MAINTENANCE |
| MAX | MAXIMUM |
| MCC | MOTOR CONTROL CENTER |
| MDF | MEDIUM DENSITY FIBERBOARD |
| MDO | MEDIUM DENSITY OVERLAY |
| MECH | MECHANICAL |
| MEP | MECHANICAL, ELECTRICAL, PLUMBING |
| MER | MECHANICAL EQUIPMENT ROOM |
| MEZZ | MEZZANINE |
| MFR | MANUFACTURER |
| MH | MANHOLE |
| MIN | MINIMUM |
| MISC | MISCELLANEOUS |
| MM | MILLIMETER |
| MTD | MOUNTED |
| MTL | METAL |
| **N** | |
| N | NEWTON |
| N/A | NOT APPLICABLE |
| NC | NOISE CRITERIA |
| NIC | NOT IN CONTRACT |
| NO | NUMBER |
| NOM | NOMINAL |
| NPS | NOMINAL PIPE SIZE |
| NRC | NOISE REDUCTION COEFFICIENT |
| NTS | NOT TO SCALE |
| **O** | |
| OA | OUTSIDE AIR |
| OC | ON CENTER |
| OCEW | ON CENTER EACH WAY |
| OD | OUTSIDE DIAMETER/DIMENSION |
| OFCI | OWNER FURNISHED, CONTRACTOR INSTALLED |
| OFOI | OWNER FURNISHED, OWNER INSTALLED |
| OH | OVER HEAD |
| OPH | OPPOSITE HAND |
| OPNG | OPENING |
| OPP | OPPOSITE |
| OXY | OXYGEN |
| **P** | |
| PAF | POWER-ACTUATED FASTENER |
| PBD | PARTICLEBOARD |
| PD | PERIMETER DRAIN |
| PERF | PERFORATED |
| PL | PLATE |
| PLBG | PLUMBING |
| PLF | POUNDS PER LINEAR FOOT |
| PR | PAIR |
| PREFAB | PREFABRICATED |
| PSF | POUNDS PER SQUARE FOOT |
| PSI | POUNDS PER SQUARE INCH |
| PTD | PAINTED |
| PTN | PARTITION |
| **Q** | |
| QTY | QUANTITY |
| **R** | |
| R | RADIUS |
| RA | RETURN AIR |
| RCP | REFLECTED CEILING PLAN |
| RD | ROOF DRAIN |
| RECPT | RECEPTACLE |
| REF | REFERENCE |
| REFR | REFRIGERATOR |
| REINF | REINFORCED / REINFORCING |
| REQ | REQUIRE / REQUIRED |
| REV | REVISION / REVISED |
| RM | ROOM |
| RO | ROUGH OPENING |
| **S** | |
| SA | SUPPLY AIR |
| SAFB | SOUND ATTENUATING FIRE BLANKET / BATT |
| SAN | SANITARY |
| SCHED | SCHEDULE |
| SD | STORM DRAIN |
| SECT | SECTION |
| SF | SQUARE FEET / FOOT |
| SHR | SHOWER |
| SHT | SHEET |
| SIM | SIMILAR |
| SM | SQUARE METER |
| SMS | SHEET METAL SCREW |
| SP | STANDPIPE |
| SPEC | SPECIFICATION |
| SPKR | SPEAKER |
| SPR | SPRINKLER |
| SQ | SQUARE |
| SST | STAINLESS STEEL |
| ST | STONE |
| STD | STANDARD |
| STL | STEEL |
| STMS | SELF-TAP SHEET METAL SCREW |
| STRL | STRUCTURAL |
| SUSP | SUSPENDED |
| SYMM | SYMMETRICAL |
| **T** | |
| T&G | TONGUE AND GROOVE |
| T/ | TOP OF (SEE OTHER WORD) |
| TEL | TELEPHONE OR TELECOM |
| TEMP | TEMPERATURE |
| TGB | TOGGLE BOLT |
| THK | THICKNESS |
| TP | TOILET PARTITION |
| TV | TELEVISION |
| TYP | TYPICAL |
| **U** | |
| UL | UNDERWRITERS LABORATORY |
| UON | UNLESS OTHERWISE NOTED |
| **V** | |
| VERT | VERTICAL |
| VEST | VESTIBULE |
| VIF | VERIFY IN FIELD |
| **W** | |
| W/ | WITH |
| W/O | WITHOUT |
| WC | WATER CLOSET |
| WDS | WOOD SCREW |
| WP | WORK POINT |
| WT | WEIGHT |
| WWR | WELDED WIRE REINFORCING |

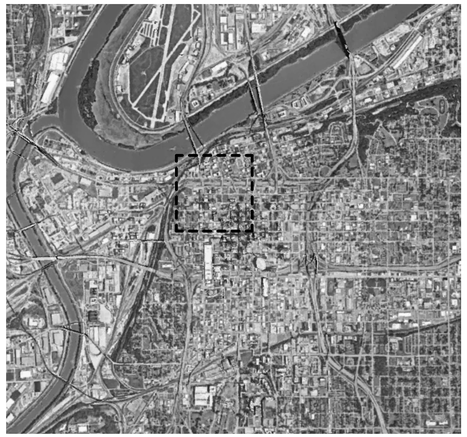

VICINITY MAP

N.T.S.

600 BROADWAY BLVD STE 200, KANSAS CITY, MO 64105

LOCATION MAP

N.T.S.

LOCATION MAPS

## SHEET LIST



| # | SHEET NAME | ORIGINIAL ISSUE DATE | LATEST REVISION DATE |
|---|---|---|---|
| GENERAL | | | |
| G000 | COVER | 05/31/2022 | 06/07/2022 |
| G001 | GENERAL NOTES, SYMBOLS, AND LEGENDS | 05/31/2022 | |
| G005 | SPECIFICATIONS | 05/31/2022 | 06/07/2022 |
| G006 | SPECIFICATIONS | 05/31/2022 | 06/07/2022 |
| G010 | CODE PLAN | 05/31/2022 | 06/07/2022 |
| G020 | WALL TYPES | 05/31/2022 | 06/07/2022 |
| ARCHITECTURE | | | |
| AD100 | DEMOLITION - LEVEL 03 & 04 | 05/31/2022 | 06/07/2022 |
| AD150 | RCP DEMOLITION - LEVEL 04 | 05/31/2022 | 06/07/2022 |
| A103 | FLOOR PLAN - LEVEL 03 | 05/31/2022 | 06/07/2022 |
| A104 | FLOOR PLAN - LEVEL 04 | 05/31/2022 | 06/07/2022 |
| A152 | REFLECTED CEILING PLAN - LEVEL 02 | 05/31/2022 | 06/07/2022 |
| A153 | REFLECTED CEILING PLAN - LEVEL 03 | 05/31/2022 | 06/07/2022 |
| A154 | REFLECTED CEILING PLAN - LEVEL 04 | 05/31/2022 | 06/07/2022 |
| A400 | ENLARGED PLANS & INTERIOR ELEVATIONS | 05/31/2022 | 06/07/2022 |
| A570 | INTERIOR SECTION DETAILS | 05/31/2022 | 06/07/2022 |
| A600 | DOOR & FINISH SCHEDULES | 05/31/2022 | 06/07/2022 |
| A653 | FINISH PLAN - LEVEL 03 | 05/31/2022 | 06/07/2022 |
| A654 | FINISH PLAN - LEVEL 04 | 05/31/2022 | 06/07/2022 |
| MECHANICAL | | | |
| M001 | MECHANICAL LEGEND NOTES | 05/31/2022 | |
| M103 | LEVEL 03 - HVAC PLAN | 05/31/2022 | 06/07/2022 |
| M104 | LEVEL 04 - HVAC PLAN | 05/31/2022 | 06/07/2022 |
| M201 | MECHANICAL DETAILS AND SCHEDULES | 05/31/2022 | 06/07/2022 |
| M301 | MECHANICAL SPECIFICATIONS | 05/31/2022 | |
| MP102 | LEVEL 02 - HVAC-PLUMBING PLAN | 05/31/2022 | 06/07/2022 |
| PLUMBING | | | |
| P001 | PLUMBING LEGEND AND NOTES | 05/31/2022 | |
| P103 | LEVEL 03 - DRAIN AND VENT PLAN | 05/31/2022 | |
| P104 | LEVEL 04 - DRAIN AND VENT PLAN | 05/31/2022 | |
| P153 | LEVEL 03 - DOMESTIC WATER PLAN | 05/31/2022 | 06/07/2022 |
| P154 | LEVEL 04 - DOMESTIC WATER PLAN | 05/31/2022 | 06/07/2022 |
| P201 | PLUMBING DETAILS AND SCHEDULES | 05/31/2022 | |
| P301 | PLUMBING SPECIFICATIONS | 05/31/2022 | |
| ELECTRICAL | | | |
| ED103 | LEVEL 03 - ELECTRICAL DEMOLITION PLAN | 05/31/2022 | |
| ED104 | LEVEL 04 - ELECTRICAL DEMOLITION PLAN | 05/31/2022 | |
| E002 | ELELCTRICAL NOTES | 05/31/2022 | |
| E103 | LEVEL 03 - POWER PLAN | 05/31/2022 | |
| E104 | LEVEL 04 - POWER PLAN | 05/31/2022 | 06/07/2022 |
| E153 | LEVEL 03 - LIGHTING PLAN | 05/31/2022 | 06/07/2022 |
| E154 | LEVEL 04 - LIGHTING PLAN | 05/31/2022 | 06/07/2022 |
| E301 | ELECTRICAL SCHEDULES | 05/31/2022 | 06/07/2022 |
| E401 | ELECTRICAL SPECIFICATIONS | 05/31/2022 | |
| E402 | ELECTRICAL SPECIFICATIONS | 05/31/2022 | |
| TECHNOLOGY | | | |
| T001 | TECHNOLOGY LEGEND | 05/31/2022 | |
| T002 | TECHNOLOGY NOTES | 05/31/2022 | |
| T103 | LEVEL 03 - TECHNOLOGY PLAN | 05/31/2022 | |
| T104 | LEVEL 04 - TECHNOLOGY PLAN | 05/31/2022 | 06/07/2022 |
| T201 | TECHNOLOGY DETAILS | 05/31/2022 | |
| T301 | TECHNOLOGY SPECIFICATIONS | 05/31/2022 | |
| T302 | TECHNOLOGY SPECIFICATIONS | 05/31/2022 | |




odimo™
701 E 63RD STREET SUITE 210
KC MO 64110 | 816.708.1500


ODIMO PROJ. #: 211002

05/31/2022

BID / PERMIT SET


**ARCHITECT**
AMY J. SLATTERY, AIA
ODIMO LLC
701 E 63RD STREET #210
KANSAS CITY, MO 64110
816.708.1500
ASLATTERY@ODIMO.US

**MEP ENGINEERING**
ATTN: BRAD LEWIS
BRANCHPATTERN, INC.
1508 GRAND BOULEVARD
KANSAS CITY, MO 64108
816.531.2121
BLEWIS@BRANCHPATTERN.COM


STATE OF MISSOURI
AMY J. SLATTERY
NUMBER A-2007019930
ARCHITECT
06/07/2022

DIVISION 01 – GENERAL REQUIREMENTS

011000 - SUMMARY
1. Project Identification: MARC Phase 1 Office Renovation
   A. Project Location: 600 Broadway Blvd, Kansas City, MO 64105
   B. Owner: Mid-America Regional Council
      a. Owner's Representative:
         • Carol Gonzales, Director of Finance and Administration (MARC)
            1. Contact Email: cgonzales@MARC.ORG
         • Eric Winebrenner, Public Safety Program Director (MARC)
            1. Contact Email: ewinebrenner@MARC.ORG
   C. Architect: Odimo, LLC
      a. Architect's Representative: Ashley Perrin
         • Contact Email: aperrin@odimo.us
         • Contact Number: 816-708-1506
   D. MEP Engineer: BranchPattern
      a. MEP Representative: Mark Stainbrook
         • Contact Email: mark.s@branchpattern.com
         • Contact Number: 913-254-3426
2. Type of Contract: Project will be constructed under a single prime contract.
3. Limits on Use of Site: Confine construction operations to work area as indicated within the Drawings. Coordinate access to adjacent spaces, if required to complete work as indicated in the Drawings, with the Owner and building management company.
4. Driveways, Walkways, and Entrances: Keep driveways, parking garage, loading areas, and entrances serving premises clear and available to Owner, Owner's employees, other building tenants, and emergency vehicles at all times. Do not use these areas for parking or for storage of materials.
5. Condition of Existing Building: Maintain portions of existing building affected by construction operations in a weathertight condition throughout construction period. Repair damage caused by construction operations.
6. Condition of Existing Grounds: Maintain portions of existing grounds, landscaping, and hardscaping affected by construction operations throughout construction period. Repair damage caused by construction operations.
7. Items to be Owner Provided, Owner Installed (OPOI) and Owner Provided, Contractor Installed (OPCI) have been noted within the drawings.
8. Owner Limited Occupancy of Completed Areas of Construction: Owner reserves the right to occupy and to place and install equipment in completed portions of the Work, prior to Substantial Completion of the Work, provided such occupancy does not interfere with completion of the Work. Such placement of equipment and limited occupancy shall not constitute acceptance of the total Work.
9. Comply with restrictions on construction operations.
10. Comply with limitations on use of public streets, work on public streets, rights of way, and other requirements of authorities having jurisdiction.
11. On-Site Work Hours: Limit work in the existing building to standard work hours, excluding nights and weekends, to be coordinated as necessary by building management company and owner.
12. Existing Utility Interruptions: Do not interrupt utilities serving facilities occupied by Owner or others unless permitted under the following conditions and then only after providing temporary utility services according to requirements indicated:
   A. Notify Owner not less than two days in advance of proposed utility interruptions.
   B. Obtain Owner's written permission before proceeding with utility interruptions.
13. Noise, Vibration, Dust, and Odors: Coordinate operations that may result in high levels of noise and vibration, dust, odors, or other disruption to Owner occupancy with Owner.
   A. Notify Owner not less than two days in advance of proposed disruptive operations.
   B. Obtain Owner's written permission before proceeding with disruptive operations.
14. Smoking and Controlled Substance Restrictions: Use of tobacco products, alcoholic beverages, and other controlled substances within the existing building is not permitted.
15. The Contractor shall furnish all labor, materials, tools, equipment necessary for, and incidental to, construction of this project as indicated on Drawings and specified herein.
16. Work shall include everything requisite and necessary to finish work properly, notwithstanding that every item of labor or materials or accessories required to make project complete may not be specifically mentioned.

012200 - UNIT PRICES
1. Unit prices include all necessary material, plus cost for delivery, installation, insurance, applicable taxes, overhead, and profit.
2. Owner reserves the right to reject Contractor's measurement of work-in-place that involves use of established unit prices and to have this work measured, at Owner's expense, by an independent surveyor acceptable to Contractor.
3. Schedule of Unit Prices:
   B. Unit Price No. 1: Cutting and patching gypsum board.
      1. Description: Cutting of new or existing gypsum board up to 1 inches thick, removal, and subsequent patching of gypsum, in accordance with Section 092900 "Gypsum Board."
      2. Unit of Measurement: 5 square foot of gypsum board removed.
   C. Unit Price No. 2: Installing Joint Sealants.
      1. Description: Installation of joint sealants in accordance with Section 079200 "Joint Sealants."
      2. Unit of Measurement: 1 linear feet of sealant.
   D. Unit Price No. 3: Installing Acoustical Joint Sealants.
      1. Description: Installation of acoustical joint sealants in accordance with Section 079200 "Joint Sealants."
      2. Unit of Measurement: 1 linear feet of sealant.

012300 - ALTERNATES
1. Coordination: Revise or adjust affected adjacent work as necessary to completely integrate work of the alternate into Project.
   A. Include as part of each alternate, miscellaneous devices, accessory objects, and similar items incidental to or required for a complete installation whether or not indicated as part of alternate.
   B. Execute accepted alternates under the same conditions as other work of the Contract.
   C. Reference Drawings and associated Specification Sections for further information.
2. Schedule of Alternates:
   A. Alternate No. 1: Rm 428 - Monitor Wall
      a. Base Bid: Provide walls to deck (A3 wall type) surrounding Rm 427 Secure Server Room. Remove ceiling tile, protect, adjust grid, and reinstall tile (altering as needed) at full perimeter, interior and exterior, of new room.
      b. Alternate: In lieu of Base Bide, provide wall (A3 wall type) with integrated monitor mount reinforcement, door, door hardware, and frame. Remove ceiling tile, protect, adjust grid, and reinstall tile (altering as needed) at full extent of new wall. Walls surrouding adjacent rooms will only go to bottomside of existing ceiling tile.
   B. Alternate No. 2: Rm 407 - Worksurface w/ Shelving
      a. Base Bid: No Scope
      b. Alternate: Provide plastic laminate countertop, counter supports, aluminum legs, and wire shelving. Secure through existing wall finish. Refer to plans for additional information.
   C. Alternate No. 3: Rm 313 - New High-Density Shelving
      a. Base Bid: No Scope
      b. Alternate: Demolish existing base cabinets, countertop, and upper cabinets in their entirety. Cap plumbing as needed - refer to MEP. Confirm blocking in wall as needed, and patch/repair existing GWB. Paint wall corner to corner. Provide high-density shelving.
   D. Alternate No. 4: Level 02 - Additional Walls to Deck
      a. Base Bid: No Scope
      b. Alternate:Provide the additional walls (A3b wall type) on Level 02 atop existing walls as indicated in the Drawings. Paint wall in their entirety as indicated on the Drawings.
   E. Alternate No. 5: Phased Construction Process
      a. Base Bid: Construction to occur on Level 02, Level 03, and Level 04 to occur concurrently.
      b. Alternate: Provide resulting cost and schedule impact if work on Level 04 were to occur prior to work on Level 03, in order to provide the owner the opportunity to move floors and remain working in the building during construction. Assume receipt of Level 04 TCO to occur prior to start of work on Level 03. Minor work can continue on Level 04 following transition of floors, but work is to be kept to a minimum.

012500 - SUBSTITUTION PROCEDURES
1. The specifications herein outline the Basis of Design, where appropriate. Requests for substituttions, alternate manufacturers, or proposed equal products will be considered, subject to compliance with specification requirements and Architects approval.
2. Submit (1) copy for each request for consideration via email to the Architect. Identify product, fabrication, or installation method to be replaced.
   A. Request is to include the following: specification number, why specified product, fabrication, or installation method cannot be provided, product data for proposed substitution, samples, cost information, schedule adjustments, etc. Also include Contractor's waiver of rights to additional payment or time that may subsequently become necessary because of failure of proposed substitution to produce indicated results.
   B. If necessary, the Architect will request additional information or documentation for evaluation within seven days of receipt. Architect will notify Contractor of acceptance or rejection of proposed substitution within fifteen days of receipt, or seven 7 days of receipt of additional information or documentation, whatever is later.
      a. Form of Acceptance: Change Order, Construction Change Directive, or Architect's Supplemental Instructions for minor changes in the Work.

012900 PAYMENT PROCEDURES
1. Schedule of Values Coordination: Coordinate preparation of the schedule of values with preparation of Contractor's construction schedule.
   A. Submit to Architect at earliest possible dates, but no later than 7 days before the date scheduled for submittal of initial Application for Payment.
   B. Each Application for Payment following the initial Application for Payment shall be consistent with previous applications and payments as certified by Architect and paid for by Owner.
   C. Payment Application Times: The date for each progress payment is indicated in the Agreement between Owner and Contractor. The period of construction work covered by each Application for Payment is the period indicated in the Agreement.
   D. Application of Payment Forms: Use AIA Document G702 and AIA Document G703.
   E. Application Preparation: Complete every entry on form. Notarize and execute by a person authorized to sign legal documents on behalf of Contractor. Architect will return incomplete applications without action.
   F. Transmittal: Submit one copy via email to Architect. Email copy shall include waivers of lien and similar attachments if required.
   G. Application for Payment at Substantial Completion: After Architect issues the Certificate of Substantial Completion, submit an Application for Payment showing 100 percent completion for portion of the Work claimed as substantially complete.
   H. Final Payment Application: After completing Project closeout requirements, submit final Application for Payment with releases and supporting documentation not previously submitted and accepted.

013300 - SUBMITTAL PROCEDURES
1. Submittal Schedule: Submit a list of submittals, arranged in chronological order by dates required by construction schedule. Include time required for review, ordering, manufacturing, fabrication, and delivery when establishing dates. Include additional time required for making corrections or revisions to submittals noted by Architect and additional time for handling and reviewing submittals required by those corrections.
2. Submittal Information: Include the following information in each submittal:
   A. Project name.
   B. Date.
   C. Unique submittal number, including revision identifier. Include Specification Section number with sequential alphanumeric identifier; and alphanumeric suffix for resubmittals.
   D. Options: Identify options requiring selection by Architect.
   E. Deviations and Additional Information: On each submittal, clearly indicate deviations from requirements in the Contract Documents, including minor variations and limitations.
3. Electronic Submittals: Prepare submittals as PDF package, incorporating complete information into each PDF file. Name PDF file with submittal number.
4. Prepare and submit submittals required by individual Specification Sections. Types of submittals are indicated in individual Specification Sections
   A. Email: Prepare submittals as PDF package, and transmit to Architect by sending via email. Include PDF transmittal form. Include information in email subject line as requested by Architect.
5. Processing Time: Allow time for submittal review, including time for resubmittals, as follows. Time for review shall commence on Architect's receipt of submittal. No extension of the Contract Time will be authorized because of failure to transmit submittals enough in advance of the Work to permit processing, including resubmittals.
      1. Initial Review: Allow 7 days for initial review of each submittal. Allow additional time if coordination with subsequent submittals is required. Architect will advise Contractor when a submittal being processed must be delayed for coordination.
      2. Resubmittal Review: Allow 7 days for review of each resubmittal.
A. Contractor to review each submittal and check for coordination with other Work of the Contract and for compliance with the Contract Documents. Note corrections and field dimensions. Mark with approval stamp before submitting to Architect.

013516 - ALTERATION PROJECT PROCEDURES
1. Prior to start of alteration work, Contractor shall conduct conference at project site. Attendees shall include Owner's Representative, Architect, and Contractor.
2. Coordination meetings shall be held weekly to review progress.
3. Storage and handling of salvaged materials:
   A. Salvaged Materials:
      a. Clean loose dirt and debris from salvaged items unless more extensive cleaning is indicated.
      b. Store items in a secure area until delivery to Owner.
      c. Transport items to Owner's storage area on-site.
      d. Protect items from damage during transport and storage.
   B. Salvaged Materials for Reinstallation:
      a. Repair and clean items for reuse as indicated.
      b. Protect items from damage during transport and storage.
      c. Reinstall items in locations indicated. Comply with installation requirements for new materials and equipment unless otherwise indicated. Provide connections, supports, and miscellaneous materials to make items functional for use indicated.
   C. Existing Materials to Remain: Protect construction indicated to remain against damage and soiling from construction work. Where permitted by Architect, items may be dismantled and taken to a suitable, protected storage location during construction work and reinstalled in their original locations after alteration and other construction work in the vicinity is complete.
   D. Storage: Catalog and store items within a weathertight enclosure where they are protected from moisture, weather, condensation, and freezing temperatures.
4. Protect persons, motor vehicles, surrounding surfaces of building, building site, plants, and surrounding buildings from harm resulting from alteration work.
5. Protect existing materials with temporary protections and construction. Do not remove existing materials unless otherwise indicated.
6. Comply with each product manufacturer's written instructions for protections and precautions. Protect against adverse effects of products and procedures on people and adjacent materials, components, and vegetation.
7. Notify Owner, Architect, authorities having jurisdiction, and entities owning or controlling wires, conduits, pipes, and other services affected by alteration work before commencing operations.
8. Disconnect and cap pipes and services as required by authorities having jurisdiction, as required for alteration work.
9. Maintain existing services unless otherwise indicated; keep in service, and protect against damage during operations. Provide temporary services during interruptions to existing utilities.
10. Comply with NFPA 241 requirements unless otherwise indicated.
11. Record existing work before each procedure (preconstruction), and record progress during the work. Use digital preconstruction documentation photographs.

DIVISION 02 – DEMOLITION

024119 - SELECTIVE DEMOLITION
1. Unless otherwise indicated, demolition waste becomes property of Contractor.
2. Owner will occupy portions of building immediately adjacent to selective demolition area. Conduct selective demolition so Owner's operations will not be disrupted.
3. Conditions existing at time of inspection for bidding purpose will be maintained by Owner as far as practical.
4. Notify Architect of discrepancies between existing conditions and Drawings before proceeding with selective demolition.
5. Hazardous Materials: It is not expected that hazardous materials will be encountered in the Work.
   A. Hazardous materials will be removed by Owner before start of the Work.
   B. If suspected hazardous materials are encountered, do not disturb; immediately notify Architect and Owner. Hazardous materials will be removed by Owner under a separate contract.
6. Utility Service: Maintain existing utilities indicated to remain in service and protect them against damage during selective demolition operations.
7. Temporary Protection: Provide temporary barricades and other protection required to prevent injury to people and damage to adjacent buildings and facilities to remain.
8. General: Demolish and remove existing construction only to the extent required by new construction and as indicated. Use methods required to complete the Work within limitations of governing regulations.
9. Existing Items to Remain: Protect construction indicated to remain against damage and soiling during selective demolition. When permitted by Architect, items may be removed to a suitable, protected storage location during selective demolition and cleaned and reinstalled in their original locations after selective demolition operations are complete.
10. Clean adjacent structures and improvements of dust, dirt, and debris caused by selective demolition operations. Return adjacent areas to condition existing before selective demolition operations began.

DIVISION 4 – MASONRY

042000 - UNIT MASONRY
1. Section Includes:
   A. Breathable Brick Sealer
2. Required Submittals:
   A. Product Data
3. Quality Assurance:
   A. Mockups:
      a. Testing: Clean an area, approx 16sf, for each type of masonry and surface condition.
         • Test cleaners & sealers for possible adverse reactions. Do not test cleaners and methods known to have deleterious effect.
         • Allow a waiting period of not less than 3 days after completion of sample cleaning to permit a study for negative reactions.
4. Cleaning Appearance Standard: Cleaned surfaces are to have a uniform appearance as viewed from 20 feet away by Architect.
5. Proceed with cleaning in an orderly manner. Ensure that dirty residues and rinse water do not wash over dry, cleaned surfaces.
6. Prepare surface per Manufacturer Recommendation:
   A. Brush and vaccuum loose debris as necessary. Provide Manufacturer recommended masonry cleaner.
   B. Confirm surfaces are completely dry prior to application of sealer.
7. Interior Masonry Dustproofer
   A. Provide product to prevent further dusting of exposed interior masonry and provide water resistance to the applied surface.
      a. Manufacturer: Basis of Design - Prosoco Weather Seal Interior Masonry Dustproofer
      b. Equal substitutions will be considered.
   B. VOC Content: <100g/L
   C. Finish: Clear
   D. Sheen: Flat
   E. Non-yellowing

DIVISION 06 – WOOD, PLASTICS, AND COMPOSITES

060660 PLASTICS FABRICATIONS
1. Section includes:
   A. Acrylic Resin
   B. Mounting System
2. Required Submittals:
   A. Product Data
   B. Shop Drawings
3. Required Submittals:
   A. Product Data
   B. Shop Drawings
4. Acrylic Resin
   A. Manufacturer - Basis of Design: As indicated in the Drawings
   B. Thickness: As indicated in the Drawings
   C. Edges: Flame Polished at exposed locations
   D. Size: As indicated in the Drawings
   E. Color: As indicated in the Drawings
   F. UV Protection: Required
   G. Expansion/Contraction Allowance: per Manufacturer's Recommendation
   H. Finish: Standard Vellum
5. Mounting System
   A. Basis of Design: CRL Fixed Panel Deep U-Channel
   B. Location: Recessed in GWB partial height wall, bottom and sides of panel.
   C. Corners: Mitered.
   D. Finish: Satin Nickel
   E. Width: 1/2"
   F. Pocket Depth: 3/4"

061053 - MISCELLANEOUS ROUGH CARPENTRY
1. Lumber: DOC PS 20 and applicable rules of grading agencies indicated. If no grading agency is indicated, provide lumber that complies with the applicable rules of any rules-writing agency certified by the ALSC Board of Review. Provide lumber graded by an agency certified by the ALSC Board of Review to inspect and grade lumber under the rules indicated.
2. Factory mark each piece of lumber with grade stamp of grading agency.
3. For exposed lumber indicated to receive a stained or natural finish, mark grade stamp on end or back of each piece or omit grade stamp and provide certificates of grade compliance issued by grading agency.
4. Dress lumber, S4S, unless otherwise indicated.
5. Maximum Moisture Content of Lumber: 19 percent unless otherwise indicated.
6. General: Provide miscellaneous lumber indicated and lumber for support or attachment of other construction, including the following blocking & nailers.
7. Dimension Lumber Items: Construction or No. 2 grade lumber of any species.
8. Concealed Boards: 19 percent maximum moisture content of any of the following species and grades:
   A. Mixed southern pine or southern pine, No. 2 grade; SPIB.
   B. Eastern softwoods, No. 2 Common grade; NELMA.
   C. Northern species, No. 2 Common grade; NLGA.
   D. Western woods, Construction or No. 2 Common grade; WCLIB or WWPA.
   E. Screws for Fastening to Metal Framing: ASTM C1002, length as recommended by screw manufacturer for material being fastened.

064116 - PLASTIC-LAMINATE-FACED ARCHITECTURAL CABINETS
1. Required Submittals:
   A. Product Data
   B. Shop Drawings
2. Quality Standard: Unless otherwise indicated, comply with the "Architectural Woodwork Standards" for grades of woodwork indicated for construction, finishes, installation, and other requirements.
3. Fabricator Qualifications: Company specializing in fabricating the products specified in this section with minimum five years of documented experience.
4. SCOPE OF THE CASEWORK SUPPLIER/INSTALLER:
   A. Casework and accessories: Furnish to building, and unpack and/or uncrate, set in place, level and fasten all specified casework and equipment.
   B. Clean up: Remove debris, dirt, and rubbish accumulated as a result of delivery of this equipment and leave premises broom clean and orderly. - Americans With Disabilities Act Requirements: The following special requirements shall be met, where specifically indicated on architectural plans as "ADA," at public spaces or by General Note. To be in compliance with Federal Register Volume 56, No. 144, Rules and Regulations:
   C. Confirm coordination with appliances.
   D. Fillers, scribes, access holes: Provide all necessary fillers and scribes for a complete job.
   E. Provide all access holes in cabinets and countertops required by mechanical, electrical, and HVAC contractors.
5. Countertops:
   A. Finish - Exposed Exterior Surfaces: Decorative laminate
      a. Basis of Design: As Indicated on Drawings
   B. Finish - Solid Surface
      a. Basis of Design: As Indicated on Drawings
   C. Backsplace: Only where indicated on Drawings
   D. Composition: Glass and Porcalain aggregate, resin, and color pigments formed into flat slabs
   E. Adhesive: Per Manufacturer's Recommendation
6. Cabinets: Base & Wall
   A. Finish - Exposed Exterior Surfaces: Decorative laminate, As Indicated on Drawings
   B. Finish - Exposed Interior Surfaces: Same as exterior.
   C. Finish - Concealed Surfaces: Melamine at laminate casewor
      a. Color: White
   D. Door and Drawer Front Edge Profiles: Square edge with thin applied band - .018" minimum.
      a. Color to match exposed exterior surface laminate.
   E. Casework Construction Type: Type A - Frameless.
   F. Custom Grade: Doors, drawer fronts and false fronts.
   G. Adjustable Shelf Loading: 50 lbs. per sq. ft.
      a. Deflection: L/144.
   H. Cabinet Style: Flush overlay.
   I. Cabinet Doors and Drawer Fronts: Flush style.
   J. Drawer Construction Technique: Dovetail joints.
7. Hardware:
   a. Finish:
      • Exposed - Satin Nickel
      • Concealed - Manufacturer Standard
   b. Adjustable Shelf Supports: Standard side-mounted system using multiple holes for pin supports and coordinated self rests, polished chrome or satin chrome finish, for nominal 1 inch spacing adjustments.
      a. Product: 346ANO manufactured by Knape and Vogt.
   c. Door Pull: 5" EUROPA TAB PULL
      a. Location: As Indicated on the Drawings
      b. Basis of Design: Top Knobs
      c. Finish: Satin Nickel
   d. Drawer Pulls: 5" EUROPA TAB PULL
      a. Location: As Indicated on the Drawings
      b. Basis of Design: Top Knobs
      c. Finish: Satin Nickel
   e. Drawer Slides:
      a. Type: Full extension with overtravel.
      b. Static Load Capacity: Heavy Duty grade.
      c. Mounting: Side mounted.
      d. Stops: Integral type.
      e. Features: Provide self closing/stay closed type.
      f. Manufacturers:
         • Accuride International, Inc; 3832SC: www.accuride.com.
         • Grass America Inc: www.grassusa.com.
         • Knape & Vogt Manufacturing Company; 8417: www.knapeandvogt.com.
   f. Drawer Slides for File-Sized Drawers: Clear zinc finish, ball bearings separating tracks, full extension, 200 pound static load capacity.
      a. Product: "8800" manufactured by Knape and Vogt; "3640A" manufactured by Accuride; or
      b. approved equivalent.
   g. Hinges: European style concealed self-closing type.
      a. Finish: Brushed Satin Nickel
      b. Opening: 130-degree minimum.
      c. Manufacturers:
         • Grass America Inc: www.grassusa.com.
         • Hafele; www.hafele.com
         • Hardware Resources: www.hardwareresources.com.
      d. Wall Cleats: French cleats for stud wall partitions, with lower cleat fastened to wall and upper cleat fastened to millwork.
      e. Concealed panel clips: white plastic male-female fitting;
         • Product: Hafele Keku Push-in Fitting or approved equal; white plastic or finish to match hinges.
8. High Pressure Decorative Laminate (HPDL): NEMA LD 3, types as recommended for specific applications.
9. Provide specific types as follows:
   A. Horizontal Surfaces: HGS, 0.048 inch nominal thickness, through color, colors as scheduled, finish as scheduled.
   B. Vertical Surfaces: VGS, 0.028 inch nominal thickness, through color, colors as indicated, finish as scheduled.
   C. Laminate Backer: BKL, 0.020 inch nominal thickness, undecorated; for application to concealed backside of panels faced with high pressure decorative laminate.
10. Adhesives: Chemical resistant waterproof adhesive as recommended by manufacturer of materials being joined.
11. Joint Sealant: Mildew-resistant silicone sealant, clear.
   A. Confirm compliance with countertop manufacturer recommendation.
12. Provide sealant and caulking as necessary for solid surface countertop.
   A. Basis of Design: Standard manufacturer recommendation.

DIVISION 07 – THERMAL AND MOISTURE PROTECTION

079200 - JOINT SEALANTS
1. Required Submittals:
   A. Product Data
2. Non-Sag Sealants: Permits application in joints on vertical surfaces without sagging or slumping.
3. General - Sealants and Primers: Provide products having lower volatile organic compound (VOC) content than indicated in SCAQMD 1168.
4. Type - Acoustical Sealant - Acrylic-Urethane Sealant: Water-based; ASTM C920, Grade NS, Uses M and A; single component; paintable; not expected to withstand continuous water immersion or traffic.
   1. Movement Capability: Plus and minus 12-1/2 percent, minimum.
   2. Hardness Range: 15 to 40, Shore A, when tested in accordance with ASTM C661.
   3. Color: White.
   4. Applications:In all wall assemblies, and where not indicated as fire-rated:
      • Interior wall and ceiling control joints in non-wet areas.
      • Joints between door, window, and other frames and adjacent construction.
      • Gaps between top stud runner and structure, between bottom stud track and floor, between gypsum wall board and floor, and between gypsum wall board and structure.
      • Gaps at electrical outlets, wiring devices, piping, and other openings; between wall/ceiling and other construction; and other flanking sound paths.
5. Type - Mildew-Resistant Joint Sealants - Silicone, Mildew Resistant, Acid Curing, S, NS, 25, NT. Mildew-resistant, single-component, nonsag, plus 25 percent and minus 25 percent movement capability, nontraffic-use, acid-curing silicone joint sealant; ASTM C920, Type S, Grade NS, Class 25, Use NT.
   A. Color: To be selected by Architect from manufacturer's standard range.
   B. Application: Joints between plumbing fixtures and adjoining walls, floors, and counters in Kitchenette space.
6. Type - General Purpose Interior Sealant - Acrylic Emulsion Latex: Water-based; ASTM C834, single component, non-staining, non-bleeding, non-sagging; not intended for exterior use.
   A. Color: To be selected by Architect from manufacturer's standard range.
   B. Grade: ASTM C834; Grade - NF.
      a. Applications: Other interior joints for which no other type of sealant is indicated.

**DIVISION 08 – HARDWARE**

081113 - HOLLOW METAL DOORS & FRAMES
1. Required Submittals:
   A. Product Data
   B. Shop Drawings
2. Manufacturers: Subject to compliance with requirements, provide products by one of the following:
   A. Ceco Door; ASSA ABLOY.
   B. Curries Company; ASSA ABLOY.
   C. Republic Doors and Frames.
3. PERFORMANCE REQUIREMENTS
4. Fire-Rated Door Assemblies: Assemblies complying with NFPA 80 that are listed and labeled by a qualified testing agency acceptable to authorities having jurisdiction for fire-protection ratings indicated on Drawings, based on testing at positive pressure according to NFPA 252 or UL 10C.
5. Heavy-Duty Doors and Frames: SDI A250.8, Level 2; SDI A250.4, Level B.
   a. Doors:
      • Type: As indicated in the Door and Frame Schedule.
      • Thickness: 1-3/4 inches.
      • Face: Uncoated steel sheet, minimum thickness of 0.042 inch.
      • Edge Construction: Model 1, Full Flush.
      • Core: Manufacturer's standard.
      • Fire-Rated Core: Manufacturer's standard core for fire-rated, when indicated on the Drawings.
      • Color: Paint to match other existing doors on level installed.
   b. Frames:
      • Materials: Uncoated steel sheet, minimum thickness of 0.053 inch.
      • Frames: Fabricated from same thickness material as adjacent door frame.
      • Construction: Face Welded
      • Color: Paint to match other existing frames on level installed.
6. Exposed Finish: Prime
7. Frame Anchors:
   A. Jamb Anchors:
      a. Type: Anchors of minimum size and type required by applicable door and frame standard, and suitable for performance level indicated.
      b. Quantity: Minimum of three anchors per jamb, with one additional anchor for frames with no floor anchor. Provide one additional anchor for each 24 inches of frame height above 7 feet .
      c. Postinstalled Expansion Anchor: Minimum 3/8-inch- diameter bolts with expansion shields or inserts, with manufacturer's standard pipe spacer.
   B. Floor Anchors: Provide floor anchors for each jamb and mullion that extends to floor.
   C. Floor Anchors for Concrete Slabs with Underlayment: Adjustable-type anchors with extension clips, allowing not less than 2-inch height adjustment. Terminate bottom of frames at top of underlayment.
   D. Material: ASTM A 879/A 879M, Commercial Steel (CS), 04Z coating designation; mill phosphatized.
8. Inserts, Bolts, and Fasteners: Hot-dip galvanized according to ASTM A153/A153M.
   A. Cold-Rolled Steel Sheet: ASTM A1008/A1008M, Commercial Steel (CS), Type B; suitable for exposed applications.
   B. Hot-Rolled Steel Sheet: ASTM A1011/A1011M, Commercial Steel (CS), Type B; free of scale, pitting, or surface defects; pickled and oiled.
   C. Metallic-Coated Steel Sheet: ASTM A653/A653M, Commercial Steel (CS), Type B.
9. Hollow-Metal Frames: Fabricate in one piece except where handling and shipping limitations require multiple sections. Where frames are fabricated in sections, provide alignment plates or angles at each joint, fabricated of metal of same or greater thickness as frames.
   A. Fire-Rated Openings: Install frames according to NFPA 80
10. Hollow-Metal Doors: Fit and adjust hollow-metal doors accurately in frames, within clearances specified below.
   A. Non-Fire-Rated Steel Doors: Comply with ANSI/SDI A250.8.
   B. Fire-Rated Doors: Install doors with clearances according to NFPA 80.
   C. Smoke-Control Doors: Install doors according to NFPA 105.
11. Door Silencers: Except on weather-stripped frames, drill stops to receive door silencers as follows. Keep holes clear during construction.
   A. Single-Door Frames: Drill stop in strike jamb to receive three door silencers.
   B. Double-Door Frames: Drill stop in head jamb to receive two door silencers.
12. Hardware Preparation: Factory prepare hollow-metal frames to receive templated mortised hardware, and electrical wiring; include cutouts, reinforcement, mortising, drilling, and tapping according to SDI A250.6, the Door Hardware Schedule, and templates.
13. Reinforce frames to receive nontemplated, mortised, and surface-mounted door hardware.
14. Comply with BHMA A156.115 for preparing hollow-metal frames for hardware.
15. GLAZING
   A. Provide glazing when indicated in the Drawings
   B. Glazing type: Tempered
   C. Thickness: 1/4", or min. as required by Manufacturer
   D. Coordinated with door and beads.
   E. Color: Clear.

**081416 - FLUSH WOOD DOORS**
1. Required Submittals:
   A. Product Data
   B. Shop Drawings
   C. Manufacturers: Subject to compliance with requirements, provide products by one of the following:
      a. VT Industries Inc.
      b. Masonite Architectural
      c. Eggers Industries
   D. Thickness: 1 3/4"
   E. Factory Finished
   F. VENEER-FACED DOORS FOR OPAQUE FINISH
      a. Performance Grade: ANSI/WDMA I.S. 1A Heavy Duty.
      b. Interior Solid-Core Doors:
         • Grade: Premium.
         • Finish: Prepared for paint. To be Field Painted.
         • Color: Paint to match other existing doors on level installed.
      c. Exposed Vertical Edges: Same species as faces or a compatible species - edge Type A.
      d. Core: Structural composite lumber.
      e. Construction: Five plies. Stiles and rails are bonded to core, then entire unit is abrasive planed before veneering. Faces are bonded to core using a hot press.
      f. Confirm coordination with Hollow Metal Frames.
   G. LIGHT FRAMES
      a. Wood Beads for Light Openings in Wood Doors: Provide manufacturer's standard wood beads unless otherwise indicated.
      b. Wood Species: Species compatible with door faces.
      c. At locations indicated in the Drawing.
      d. Profile: Flush rectangular beads.
      e. Heavy Duty for secure install of laminated glazing.
   H. GLAZING
      a. Safety Glazing to be clear laminated glass w/ two-plys of ultra clear heat-strengthened float glass
      b. Thickness: 6mm per ply, min.
      c. Interlayer Thickness: .06 in
      d. Color: Clear
      e. Safety glazing labeling: where indicated, permanently mark glazing w/ certification label of the sgcc. Label shall indicate manufacturer's name, type of glss, thickness, and safety glazing standard w/ which glass complies.

087100 - DOOR HARDWARE
1. Required Submittals:
   A. Product Data
   B. Door Hardware Sets
      a. Same Scheduling sequence as documents
2. Door Hardware:
   A. Provide manufacturer's standard products meeting the design intent of this Specification, free of imperfections affecting appearance or serviceability.
   B. Accessibility Requirements: Where handles, pulls, latches, locks, and other operating devices are indicated to comply with accessibility requirements, comply with the U.S. Architectural & Transportation Barriers Compliance Board's "Americans with Disabilities Act (ADA), Accessibility Guidelines for Buildings and Facilities (ADAAG)" and ANSI A117.1
3. Hinges, general:
   A. Butts and Hinges: BHMA A156.1.
   B. Hinge Weight: Heavy-weight hinges.
   C. Hinge Base Metal: Unless otherwise indicated, provide the following
      a. Interior Hinges: Steel, with steel pin
   D. Hinge pins: Use nonrising pins
   E. Electrified Functions for Hinges: Comply with the following:
         1. Power Transfer: Concealed PTFE-jacketed wires, secured at each leaf and continuous through hinge knuckle.
         2. Monitoring: Concealed electrical monitoring switch.
         3. Power Transfer and Monitoring: Concealed PTFE-jacketed wires, secured at each leaf and continuous through hinge knuckle, and with concealed electrical monitoring switch.
   F. Fasteners: Comply with the following:
         1. Machine Screws: For metal doors and frames. Install into drilled and tapped holes.
         2. Wood Screws: For wood doors and frames.
         3. Threaded-to-the-Head Wood Screws: For fire-rated wood doors.
         4. Screws: Phillips flat-head; Finish screw heads to match surface of hinges.
4. Lock and latches, general:
   A. Provide operating devices that do not require tight grasping, pinching, or twisting of the wrist and that operate with a force of not more than 5 lbf (22 N).
   B. Latches and Locks for Means of Egress Doors: Comply with NFPA 101. Latches shall not require more than 15 lbf (67 N) to release the latch. Locks shall not require use of a key, tool, or special knowledge for operation
   C. Electrified Locking Devices: BHMA A156.25.
   D. Strikes: Manufacturer's standard strike with strike box for each latchbolt or lock bolt, with curved lip extended to protect frame, finished to match door hardware set, and as follows:
         1. Strikes for Mortise Locks and Latches: BHMA A156.13.
         2. Strikes for Interconnected Locks and Latches: BHMA A156.12.
         3. Strikes for Auxiliary Deadlocks: BHMA A156.5.
5. Mechanical locks and latches, general:
   A. Lock Functions: Function numbers and descriptions indicated in door hardware sets comply with the following:
         1. Mortise Locks: ANSI/BHMA A156.2 Series 1000, Grade 1.
         2. Cylindrical Locks: ANSI/BHMA A156.2 Series 4000, Grade 1.
6. Door bolts:
   A. Bolt Throw: Comply with testing requirements for length of bolts required for labeled fire doors.
   B. Dustproof Strikes: BHMA A156.16, Grade 1.
   C. Automatic and Self-Latching Flush Bolts: BHMA A156.3, Grade 1 unless Grade 2 is indicated; designed for mortising into door edge.
7. Lock cylinders:
   A. Standard Lock Cylinders: BHMA A156.5 Grade 1.
   B. Cylinders: Interchangeable core, manufacturer's standard tumbler type, constructed from brass or bronze, stainless steel, or nickel silver, comply with schedule and the following:
         1. Number of Pins: to match existing building systems.
         2. Mortise Type: Threaded cylinders with rings and straight- or clover-type cam.
   C. Construction Keying: Comply with the following:
         1. Construction Master Keys: Provide cylinders with feature that permits voiding of construction keys without cylinder removal. Provide 10 construction master keys.
         2. Construction Cores: Provide construction cores that are replaceable by permanent cores. Provide 10 construction master keys.
               a. Replace construction cores with permanent cores as directed by Owner.
               b. Furnish permanent cores to Owner for installation.
   D. Manufacturer: Same manufacturer as for locks and latches.
8. Keying:
   A. Door P302 shall be keyed to the existing master Best key system. Keying Schedule must be approved by the Owner prior to ordering any locks. Door P310 is to be keyed independently from overall building / university standard cylinders. Provide Construction cores.
   B. Key all locks separately, or alike, as directed by the Owner's Representative and Architect.
   C. Provide keys as follows:
         1. Change Keys: 2 per lock.
         2. Master Keys: 6 required (per system).
         3. Identification: Stamp all (master-type) keys with the following:
               a. Do Not Duplicate.
               b. Key change number (all keys).
9. Electric Strikes:
   A. Standard: BHMA A156.31 Grade 1.
   B. General: Use fail-secure electric strikes with fire-rated devices.
10. Operating trim:
   A. Standard: BHMA A156.6 [and as illustrated on Drawings].
   B. Materials: Fabricate from brass bronze or stainless steel, unless otherwise indicated.
12. Protective trim units:
   A. Size: 1-1/2 inches (38 mm) less than door width on push side and 1/2 inch (13 mm) less than door width on pull side, by height specified in door hardware sets.
   B. Fasteners: Manufacturer's standard machine or self-tapping screws.
   C. Metal Protective Trim Units: BHMA A156.6; beveled top and 2 sides; fabricated from [material indicated in door hardware sets.
13. Stops and holders:
   A. Stops and Bumpers: BHMA A156.16 Grade 1 unless Grade 2 is indicated
         1. Provide floor stops for doors unless wall or other type stops are scheduled or indicated. Do not mount floor stops where they will impede traffic. Where floor or wall stops are not appropriate, provide overhead holders.
   B. Mechanical Door Holders: BHMA A156.16 Grade 1 unless Grade 2 is indicated
   C. Combination Floor and Wall Stops and Holders: BHMA A156.8 Grade 1
   D. Combination Overhead Stops and Holders: BHMA A156.8 Grade 1
   E. Electromagnetic Door Holders: BHMA A156.15. [Listed under Category C in BHMA's "Certified Product Directory."]
         1. Coordinate with fire detectors and interface with fire alarm system for labeled fire door assemblies.
   F. Silencers for Metal Door Frames: BHMA A156.16, Grade 1; neoprene or rubber, minimum diameter 1/2 inch (13 mm); fabricated for drilled-in application to frame.
14. Door gasketing:
   A. Standard: BHMA A156.22. [Listed under Category J in BHMA's "Certified Product Directory."]
   B. General: Provide continuous weather-strip gasketing on exterior doors and provide smoke, light, or sound gasketing on interior doors where indicated or scheduled. Provide noncorrosive fasteners for exterior applications and elsewhere as indicated.
         1. Perimeter Gasketing: Apply to head and jamb, forming seal between door and frame.
         2. Meeting Stile Gasketing: Fasten to meeting stiles, forming seal when doors are closed.
         3. Door Bottoms: Apply to bottom of door, forming seal with threshold when door is closed.
   C. Air Leakage: Not to exceed 0.50 cfm per foot (0.000774 cu. m/s per m) of crack length for gasketing other than for smoke control, as tested according to ASTM E 283.
   D. Smoke-Labeled Gasketing: Assemblies complying with NFPA 105 that are listed and labeled by a testing and inspecting agency acceptable to authorities having jurisdiction, for smoke-control ratings indicated, based on testing according to UL 1784.
         1. Provide smoke-labeled gasketing on 20-minute-rated doors and on smoke-labeled doors.
   E. Fire-Labeled Gasketing: Assemblies complying with NFPA 80 that are listed and labeled by a testing and inspecting agency acceptable to authorities having jurisdiction, for fire ratings indicated, based on testing according to NFPA 252, UBC Standard 7-2
   F. Sound-Rated Gasketing: Assemblies that are listed and labeled by a testing and inspecting agency, for sound ratings indicated, based on testing according to ASTM E 1408.
   G. Replaceable Seal Strips: Provide only those units where resilient or flexible seal strips are easily replaceable and readily available from stocks maintained by manufacturer.
   H. Gasketing Materials: ASTM D 2000 and AAMA 701/702.
16. Miscellaneous door hardware:
   A. Boxed Power Supplies: Modular unit in NEMA ICS 6, Type 4 enclosure; filtered and regulated; voltage rating and type matching requirements of door hardware served; and listed and labeled for use with fire alarm systems.
   B. Auxiliary Hardware: BHMA A156.16 , Grade 1.
17. Finishes: As noted below. Finishes shall conform to the quality of finish including thickness of plating or coating (if any), composition, hardness and other qualities complying with manufacturer's standards, but in no case less than the standards established by ANSI A156.18 (BHMA 1301) or Federal Specifications FF-H-111C as applicable.
1. Notify the Architect if doors require alternate hardware or fixtures due to existing conditions.

HARDWARE SET: 01, PROVIDE EACH SGL DOOR(S) WITH THE FOLLOWING:

| QTY | DESCRIPTION | CATALOG NUMBER | FINISH | MFR |
|---|---|---|---|---|
| 3 EA | HINGE | 5BB1HW | 652 | IVE |
| 1 EA | WALL STOP | WS406/407CCV | 626 | IVE |
| 4 EA | SILENCER | 608-RKW | GRAY | ROC |
| 1 EA | MORTISE LOCK | L9050L 06 | 626 | SCH |
| 1 EA | MORTISE CYLINDER | AS REQ'D/VERIFY KEYWAY | 626 | |

HARDWARE SET: 02, PROVIDE EA SGL OF DOORS WITH THE FOLLOWING:

| QTY | DESCRIPTION | CATALOG NUMBER | FINISH | MFR |
|---|---|---|---|---|
| 3 EA | HINGE | 5BB1HW | 652 | IVE |
| 1 EA | WALL STOP | WS406/407CCV | 626 | IVE |
| 3 EA | SILENCER | 608-RKW | GRAY | ROC |
| 1 EA | MORTISE LOCK | L9080L 06 | 626 | SCH |
| 1 EA | MORTISE CYLINDER | AS REQ'D/VERIFY KEYWAY | 626 | |

HARDWARE SET: 03, PROVIDE EA SGL OF DOORS WITH THE FOLLOWING:

| QTY | DESCRIPTION | CATALOG NUMBER | FINISH | MFR |
|---|---|---|---|---|
| 1 EA | ELEC. HINGE | 5BB1 TW8 | 652 | IVE |
| 2 EA | HINGE | 5BB1 HW | 652 | IVE |
| 1 EA | ELEC. LOCKSET | L9092LEU 06N | 626 | SCH |
| 1 EA | MORTISE CYLINDER | AS REQ'D/VERIFY KEYWAY | 626 | |
| EA | WIRE HARNESS | CON X LENGTH REQ'D | | |
| 1 EA | WALL STOP | WS406/407CCV | 626 | IVE |
| 1 EA | DOOR CONTACT | 7766 | - | SCH |
| 1 SET | GASKETING | 188S | BLK | ZER |
| 1 EA | SURFACE CLOSER | 4040XP | 689 | LCN |
| 1 EA | CARD READER | BY OTHER | | |

HARDWARE SET: 04, PROVIDE EA PR OF DOORS WITH THE FOLLOWING:

| QTY | DESCRIPTION | CATALOG NUMBER | FINISH | MFR |
|---|---|---|---|---|
| 1 EA | ELEC. HINGE | 5BB1 TW8 | 652 | IVE |
| 1 EA | ELEC. LOCKSET | L9092LEU 06N | 626 | SCH |
| 5 EA | HINGE | 5BB1HW | 652 | IVE |
| 1 EA | MORTISE CYLINDER | AS REQ'D/VERIFY KEYWAY | 626 | |
| EA | WIRE HARNESS | CON X LENGTH REQ'D | | |
| 1 EA | WALL STOP | WS406/407CCV | 626 | IVE |
| 1 EA | GASKETING | 488SBK PSA | BLK | ZER |
| 2 EA | DOOR CONTACT | 7766 | - | SCH |
| 1 EA | ASTRAGAL | 8042S-BK | BLK | ZER |
| 2 EA | SURFACE CLOSER | 4040XP | 689 | LCN |
| 1 EA | CARD READER | BY OTHER | | |

MARC
Mid-America Regional Council

**MARC PHASE 1 OFFICE RENOVATION**

600 BROADWAY BLVD STE 200,
KANSAS CITY, MO 64105

odimo ™

MO CERT OF AUTH.: #2016000414
ODIMO PROJ. #: 211002


**OWNER**
ATTN: CAROL GONZALES,
DIRECTOR OF FINANCE AND ADMINISTRATION
600 BROADWAY, SUITE 200
KANSAS CITY, MO 64105
816.701.8204
CGONZALES@MARC.ORG

**ARCHITECT**
ATTN: AMY J. SLATTERY, AIA
ODIMO LLC
701 E 63RD STREET #210
KANSAS CITY, MO 64110
816.708.1500
ASLATTERY@ODIMO.US

**MEP ENGINEERING**
ATTN: BRAD LEWIS
BRANCHPATTERN, INC.
1508 GRAND BOULEVARD
KANSAS CITY, MO 64108
816.531.2121
BLEWIS@BRANCHPATTERN.COM


**ORIGINAL SHEET ISSUE DATE:** 05/31/2022

| △ | DATE | DESCRIPTION |
|---|---|---|
| 1 | 06/07/2022 | ADDENDUM 01 |

**ISSUE**
**BID / PERMIT SET**
05/31/2022

**SEAL / SIGNATURE**
STATE OF MISSOURI
AMY J. SLATTERY
NUMBER A-2007019930
ARCHITECT
06/07/2022
AMY SLATTERY - ARCHITECT - MO # 2007019930

**DESCRIPTION**
**SPECIFICATIONS**

**G005**

©2022 Odimo

HARDWARE SET: 05
PROVIDE EA SGL OF DOORS WITH THE FOLLOWING:

| QTY | DESCRIPTION | CATALOG NUMBER | FINISH | MFR |
|---|---|---|---|---|
| 1 EA | ELEC. HINGE | 5BB1 TW8 | 652 | IVE |
| 1 EA | ELEC. LOCKSET | L9092EUL 06N | 626 | SCH |
| 1 EA | WALL STOP | WS406/407CCV | 626 | IVE |
| 1 EA | DOOR CONTACT | 7766 | - | SCH |
| 1 EA | SURFACE CLOSER | 4040XP | 689 | LCN |
| 1 EA | MORTISE CYLINDER | AS REQ'D/VERIFY KEYWAY | 626 | |
| EA | WIRE HARNESS | CON X LENGTH REQ'D | | |
| 1 EA | CARD READER | BY OTHER | | |

NOTE: BALANCE OF HARDWARE IS EXISTING AND TO REMAIN. CONTACT ARCHITECT IF NOT PRESENT. CONTRACTOR TO CONFIRM COORDINATION WITH EXISTING DOOR WITH FRAME AND AGREEMENT WITH EXISTING LEVER SET CUTOUTS FROM PREVIOUS HARDWARE. NOTIFY THE ARCHITECT IF DOORS REQUIRE ALTERNATE HARDWARE OR FIXTURES DUE TO EXISTING CONDITIONS.

HARDWARE SET: 06
PROVIDE EA PR OF DOORS WITH THE FOLLOWING:

| QTY | DESCRIPTION | CATALOG NUMBER | FINISH | MFR |
|---|---|---|---|---|
| 1 EA | ELEC. HINGE | 5BB1 TW8 | 652 | IVE |
| 1 EA | ELEC. LOCKSET | L9092EUL 06N | 626 | SCH |
| 1 EA | GASKETING | 488SBK PSA | BLK | ZER |
| 2 EA | DOOR CONTACT | 7766 | - | SCH |
| 1 EA | ASTRAGAL | 8042S-BK | BLK | ZER |
| 1 EA | MORTISE CYLINDER | AS REQ'D/VERIFY KEYWAY | 626 | |
| EA | WIRE HARNESS | CON X LENGTH REQ'D | | |
| 2 EA | SURFACE CLOSER | 4040XP | 689 | LCN |
| 1 EA | CARD READER | BY OTHER | | |

NOTE: COORDINATE W/ EXISTING HOLD OPENS TO REMAIN. BALANCE OF HARDWARE IS EXISTING AND TO REMAIN. CONTACT ARCHITECT IF NOT PRESENT. CONTRACTOR TO CONFIRM COORDINATION WITH EXISTING DOOR WITH FRAME AND AGREEMENT WITH EXISTING LEVER SET CUTOUTS FROM PREVIOUS HARDWARE. NOTIFY THE ARCHITECT IF DOORS REQUIRE ALTERNATE HARDWARE OR FIXTURES DUE TO EXISTING CONDITIONS.

PROVIDE ESCUTCHEONS / ROSES AS NEEDED TO COMPLETE HARDWARE SET.

**DIVISION 09 – FINISHES**

092216 - NON-STRUCTURAL METAL FRAMING
1. Framing Members, General: Comply with ASTM C754 for conditions indicated.
   A. Steel Sheet Components: Comply with ASTM C645 requirements for steel unless otherwise indicated.
   B. Protective Coating: ASTM A653/A653M, G40, hot-dip galvanized unless otherwise indicated.
2. Studs and Tracks: ASTM C645. Use either conventional steel studs and tracks or embossed, high-strength steel studs and tracks.
   A. Manufacturers: Subject to compliance with requirements, provide products by one of the following:
      a. ClarkDietrich.
      b. MarinoWARE.
      c. MBA Building Supplies.
   B. Spacing: As indicated on the Drawings.
   C. Gauge: As indicated on the Drawings.
   D. Depth: As indicated on the Drawings.
3. Slip-Type Head Joints: Where necessary, provide the following:
   A. Deflection Track: Steel sheet top track manufactured to prevent cracking of finishes applied to interior partition framing resulting from deflection of structure above; in thickness not less than indicated for studs and in width to accommodate depth of studs.
      a. ClarkDietrich.
      b. MarinoWARE.
      c. MBA Building Supplies.
   B. Resilient Furring Channels: 1/2-inch- deep, steel sheet members designed to reduce sound transmission.
      a. Configuration: Single leg.
      b. Thickness: 25 gage, unless otherwise indicated.
      c. Location: Where indicated on the Drawings.
   C. Hat Channel: 1/2" deep, steel sheet member designed for furred wall conditions and suspended ceiling system.
      a. Thickness: 25 gage, unless otherwise indicated.
      b. Location: Where indicated on the Drawings.

092900 - GYPSUM BOARD
1. Required Submittals:
   A. Product Data
   B. Samples
2. General - Provide maximum lengths and widths available that will minimize joints in each area and that correspond with support system indicated.
3. Gypsum Board, Type X: ASTM C1396/C1396M.
   A. Manufacturers: Subject to compliance with requirements, provide products by one of the following:
      a. Georgia-Pacific Gypsum LLC.
      b. National Gypsum Company.
      c. USG Corporation.
   B. Thickness: 5/8 inch.
   C. Long Edges: Tapered.
   D. For use in all general locations unless in moisture adjacent location.
4. Mold-Resistant Gypsum Board: ASTM C1396/C1396M gypsum board
   A. Manufacturers: Subject to compliance with requirements, provide products by one of the following:
      a. Georgia-Pacific Gypsum LLC.
      b. National Gypsum Company.
      c. USG Corporation.
   B. Core: 5/8 inch, Type X.
   C. Long Edges: Tapered.
   D. Mold Resistance: ASTM D3273, score of 10 as rated according to ASTM D3274.
   E. For use at patch and repair locations at wet locations and where mold-resistant gypsum board is already installed.
5. Trim Accessories: Cornerbead, edge trim, and control joints complying with ASTM C1047.
6. Suspended Ceiling Support: Metal suspension system as necessary for gypsum ceiling locations.
   A. Hanger wire and attachments as needed
7. Sound Attenuation Blankets: Unfaced mineral fiber blanket insulation produced by combining mineral fibers of type described below with thermosetting resins to comply with ASTM C 665 for Type I (blankets without membrane facing); and as follows:
   A. Mineral Fiber Type: Glass, having a flame spread rating of 25 or less.
   B. Manufacturers: One of the following or approved equal.
      a. Owens Corning.
      b. Certainteed.
      c. Johns Manville
   C. Thickness of blankets to be the same as the depth of the metal studs as indicated in the Drawings.
8. Joint Treatment: Comply with ASTM C475/C475M.
9. Steel Drill Screws: ASTM C1002 unless otherwise indicated.
   A. Use screws complying with ASTM C954 for fastening panels to steel members from 0.033 to 0.112 inch thick.
10. Gypsum Board Finish Levels: Finish panels to levels indicated below and according to ASTM C840:
   A. Level 1: Ceiling plenum areas, concealed areas, and where indicated.
   B. Level 4: At panel surfaces that will be exposed to view unless otherwise indicated.

096513 - RESILIENT BASE
1. Required Submittals:
   A. Product Data
   B. Samples
2. Wall Base: Manufacturer: Basis of Design - As Indicated on the Drawings
   A. Corners: Joints to occur at inside corners where possible, and in no case closer than 24 inches to an external corner. Fabricate field-formed corners using manufacturer recommended techniques, procedures and methods to create continuous base around surface.
   B. Color: As indicated on the Drawings.
   C. Height: As indicated on the Drawings.
   D. Profile: As indicated on the Drawings.

096519 - RESILIENT TILE FLOORING
1. Required Submittals:
   A. Product Data
   B. Samples
2. Manufacturer: Basis of Design - As Indicated on the Drawings
   A. Color: As indicated on the Drawings.
3. Metal Edge/Transition Strips: Mechanically fastened, extruded aluminum with mill finish of profile and width shown, of height required to protect exposed edge of carpet transition to tile thickness, and of maximum lengths to minimize running joints.
   A. Basis of Design: Schluter Systems
   B. Profile: to be ADA compliant
   C. Color to be selected by Architect.
   D. Coordinate height and transition with floor materials.
   E. Adhesives: Manufacturer's recommended.

1

098433 SOUND-ABSORBING WALL UNITS
1. Required Submittals:
   A. Product Data
   B. Samples
2. Manufacturer: Basis of Design - As indicated on Drawings
   A. Size: Varies, as indicated on Drawings.
   B. Color: Varies, ss indicated on Drawings.
   C. Core: Manufacturer Standard.
   D. Edge: Square
   E. Mounting: Adhesive, per Manufacturer's recommendation.

099123 - INTERIOR PAINTING
1. Required Submittals:
   A. Product Data
   B. Samples with noted sheen levels by location
2. Manufacturer: Basis of Design - Sherwin Williams - Colors as Indicated on the Drawings
3. Material Compatibility:
   A. Materials for use within each paint system shall be compatible with one another and substrates indicated, under conditions of service and application as demonstrated by manufacturer, based on testing and field experience.
   B. For each coat in a paint system, products shall be recommended in writing by topcoat manufacturers for use in paint system and on substrate indicated.
4. Int. Painting Schedule:
   A. Steel Substrates:
      a. High-Performance Architectural Latex System:Low VOC
      b. Prime Coat: Primer, alkyd, quick dry, for metal.
      c. Intermediate Coat: Latex, interior, high performance architectural, matching topcoat.
      d. Topcoat: Latex, interior, high performance architectural, semi-gloss (MPI Gloss Level 5).
   B. Galvanized-Metal Substrates:Low VOC
      a. High-Performance Architectural Latex System:
      b. Prime Coat: Primer, galvanized, water based.
      c. Intermediate Coat: Latex, interior, high performance architectural, matching topcoat.
      d. Topcoat: Latex, interior, high performance architectural, semi-gloss (MPI Gloss Level 5).
   C. Gypsum Board Substrates: Low VOC
      a. High-Performance Architectural Latex System:
      b. Prime Coat: Primer sealer, latex, interior.
      c. Intermediate Coat: Latex, interior, high performance architectural, matching topcoat.
      d. Topcoat: Latex, interior, high performance architectural, as Indicated in the Drawings.
   D. Wood Substrates: Wood trim, Architectural woodwork, Doors, and Frames.
      a. High-Performance Architectural Latex System [MPI INT 6.3A]:
      b. Prime Coat: Primer, latex, for interior wood[, MPI #39].
      c. Intermediate Coat: Latex, interior, high performance architectural, matching topcoat.
      d. Topcoat: Latex, interior, high performance architectural, semi-gloss (MPI Gloss Level 5) / Semi-gloss.

**DIVISION 10 – SPECIALTIES**

105700 - WALL SHELVING
1. Required Submittals:
   A. Product Data
2. Manufacturer: Basis of Design: 82/182 Series by Knape and Vogt
   A. Heavy Duty
   B. Slot design: Double Slot
   C. Bracket and Standards Color: Black
3. Shelf Depth: 12"
4. Height: 6'-0"
5. Provide plywood shelves
6. Finish: Black Laminate
7. Confirm blocking as required for proper attachment.

1

**DIVISION 11 – EQUIPMENT**

113013 - RESIDENTIAL APPLIANCES

1. Required Submittals: Product Data
2. Dishwasher:
   A. Manufacturer: Basis of Design - GE Appliances
   B. Model: GDT225SGLWW
      a. Requests for substitutions will be considered if in compliance with specifications below and with Architect's approval.
   C. Finish: White.
   D. Max Width: 24".
   E. Max Height: 34.5".
3. ADA Compliant.

**DIVISION 12 – FURNISHINGS**

125250 UPHOLSTERED FURNITURE
A. Section Includes:
   a. Fabric-wrapped built-in seating
B. Required Submittals:
   A. Product Data
   B. Shop Drawings
C. Fabric:
   a. Basis of Design: As Indicated on the Drawings
   b. Material: As Indicated on the Drawings
   c. Pattern: As Indicated on the Drawings
D. Substrate:
   a. ½" Plywood substate
E. Cushion:
   a. Fill: As indicated on the Drawings
   b. Thickness: As indicated on the Drawings
   c. Provide all required attachments, fasteners, and installation components
F. Fire-Test-Response Characteristics: For fabrics treated with fire retardants, provide products that pass NFPA 701 as determined by testing of fabrics that were treated using treatment-application method intended for use for this Project by a testing and inspecting agency acceptable to authorities having jurisdiction.
G. UPHOLSTERY FABRICATION
   a. Fabricate upholstery in styles and fullnesses as determined by Architect. If less than a full width of fabric is required to produce panel of specified fullness, use equal widths of not less than one-half width of fabric located at ends of panel.
   b. Seams: Sew vertical seams with twin-needle sewing machine with selvage trimmed and overlocked. Join widths so that patterns match and vertical seams lay flat and straight without puckering. Horizontal seams are unacceptable.
   c. Side Hems: Double-turned, 1-1/2-inch- 38-mm- wide hems consisting of three layers of fabric, and blindstitched so that stitches are invisible on face of banquette.
   d. Bottom Hems: Double-turned, 4-inch- (102-mm-) wide hems consisting of three layers of fabric, and weighted and blind-stitched so that weights and stitches are invisible on face of banquette.
H. UPHOLSTERY INSTALLATION
   a. Where fabric abut wood construction, hang so that clearance between fabric and wood construction is 1/8 Inch maximum 6.4 mm.

MARC
Mid-America Regional Council

**MARC PHASE 1 OFFICE RENOVATION**

600 BROADWAY BLVD STE 200,
KANSAS CITY, MO 64105

odimo™

MO CERT OF AUTH.: #2016000414
ODIMO PROJ. #: 211002


**OWNER**
ATTN: CAROL GONZALES,
DIRECTOR OF FINANCE AND ADMINISTRATION
600 BROADWAY, SUITE 200
KANSAS CITY, MO 64105
816.701.8204
CGONZALES@MARC.ORG

**ARCHITECT**
ATTN: AMY J. SLATTERY, AIA
ODIMO LLC
701 E 63RD STREET #210
KANSAS CITY, MO 64110
816.708.1500
ASLATTERY@ODIMO.US

**MEP ENGINEERING**
ATTN: BRAD LEWIS
BRANCHPATTERN, INC.
1508 GRAND BOULEVARD
KANSAS CITY, MO 64108
816.531.2121
BLEWIS@BRANCHPATTERN.COM


**ORIGINAL SHEET ISSUE DATE:** 05/31/2022

| △ | DATE | DESCRIPTION |
|---|---|---|
| 1 | 06/07/2022 | ADDENDUM 01 |

**ISSUE**
**BID / PERMIT SET**
05/31/2022

**SEAL / SIGNATURE**

**DESCRIPTION**
**SPECIFICATIONS**

# G006

©2022 **Odimo**

**PROJECT NAME**
MARC PHASE 1 OFFICE RENOVATION

**PROJECT DESCRIPTION**
**GENERALLY, ALL WORK SHOWN IN THESE DOCUMENTS REFLECT AN ALTERATION - LEVEL 2 PER IEBC 2018 SECTION 603 AND COMPLIES WITH THE PROVISIONS OF CHAPTER 3, CHAPTER 7, & CHAPTER 8.**

THE PROJECT CONSISTS OF THE RENOVATION OF APPROX. 14,050 SF SPACE ON LEVEL 03 AND LEVEL 04 AND MINOR UPDATES ON LEVEL 02 OF AN EXISTING BUILDING AT 600 BROADWAY BLVD, KANSAS CITY, MO 64105. THE EXISTING OCCUPANCY IS UNCHANGED, AND THE EXISTING EGRESS WILL REMAIN. THIS PROJECT REPRESENTS PHASE 1 OF A MULTI-PHASE PROJECT TO BE CONTINUED IN THE FUTURE.

ALL EXISTING BUILDING INFORMATION NOTED HEREIN IS GATHERED FROM RECORD DRAWINGS OF PREVIOUS RENOVATION WORK FROM JUNK ARCHITECTS DATED 08.20.01 AND BNIM ARCHITECTS DATED 01.22.07.

**APPLICABLE CODES & STANDARDS**
- CITY OF KANSAS CITY MUNICIPAL CODE
- 2018 INTERNATIONAL BUILDING CODE
- 2018 INTERNATIONAL EXISTING BUILDING CODE
- 2018 INTERNATIONAL MECHANICAL CODE
- 2018 INTERNATIONAL PRIVATE SEWAGE DISPOSAL CODE
- 2012 INTERNATIONAL ENERGY CONSERVATION CODE, CLIMATE ZONE 4
- 2018 UNIFORM PLUMBING CODE
- 2017 NATIONAL ELECTRICAL CODE
- 2010 ADA STANDARDS FOR ACCESSIBLE DESIGN

TO THE BEST OF THE ARCHITECT'S KNOWLEDGE, THE DESIGN COMPLIES WITH THE ABOVE LISTED CODES, STANDARDS, AND DESIGN GUIDELINES, UNLESS NOTED OTHERWISE.

**LEVEL 01 BUILDING CODE REQUIREMENTS**
**OCCUPANCY** B BUSINESS
**CONSTRUCTION TYPE** I-B*
IV-HT*

1

*EXISTING BUILDING INFORMATION WAS DERIVED FROM EXISTING BUILDING DRAWINGS (JUNK ARCHITECTS) DATED 08/20/01 SHOWING THE CONSTRUCTION OF TWO BUILDINGS. 1 BUILDING IS TYPE IV, SPRINKLERED, AND THE OTHER IS TYPE II FR (I-B PER IBC), NONSPRINKLERED. SEPARATION BY 4 HR AREA SEPARATION WALL (FIRE WALL PER IBC).

**OCCUPANT LOAD**
- LEVEL 03 = 2,775 SF / 150SF PER PERSON (BUSINESS) = 19 OCCUPANTS
- LEVEL 04 = 11,275 SF / 150SF PER PERSON (BUSINESS) = 76 OCCUPANTS

**BUILDING LIFE SAFETY FEATURES:**

| SYSTEM | REQUIRED |
|---|---|
| AUTOMATIC SPRINKLER SYSTEM (903) | |
| PORTABLE FIRE EXTINGUISHERS (906.1.1) | YES |
| MANUAL FIRE ALARM SYSTEM AND SMOKE ALARM (907.2.2) | YES |
| EXIT SIGNS (1013.1) | YES |
| FIRE RATED PENETRATION AT RATED ASSEMBLIES | YES |
| EGRESS COMPLYING WITH IBC CHAPTER 10. | |
| COMMON PATH OF TRAVEL PER 1006.2.1: | 100 FT |
| EXIT ACCESS TRAVEL DISTANCE PER 1017.2: | 300 FT |

- ALL DOORS TO COMPLY WITH SECTION 1010 REQUIREMENTS FOR MEANS OF EGRESS DOORS. PER 1010.1.2.1 DOORS MAY SWING OPPOSITE THE DIRECTION OF EGRESS TRAVEL WHERE SERVING A ROOM OR AREA CONTAINING AN OCCUPANT LOAD OF LESS THAN 50.
- PER SECTION 2.2 OF THE 2018 IEBC - WORK AREA: THAT PORTION OR PORTIONS OF A BUILDING CONSISTING OF ALL RECONFIGURED SPACES AS INDICATED ON THE CONSTRUCTION DOCUMENTS. WORK AREA EXCLUDES OTHER PORTIONS OF THE BUILDING WHERE INCIDENTAL WORK ENTAILED BY THE INTENDED WORK MUST BE PERFORMED AND PORTIONS OF THE BUILDING WHERE WORK NOT INITIALLY INTENDED BY THE OWNER IS SPECIFICALLY REQUIRED BY THIS CODE.

**TRAVEL DISTANCE PER OCCUPANCY TYPE PER IBC TABLE 1017.2:**
B BUSINESS (SPRINKLED): 300 FT

**COMMON PATH OF TRAVEL DISTANCES PER OCCUPANCY TYPE PER IBC TABLE 1006.2.1:**
B BUSINESS (SPRINKLED): 100 FT

**DEAD END CORRIDOR DISTANCES PER IBC 1020.4:**
B OCCUPANCY (SPRINKLED): 50 FT

**FIRE RESISTANCE RATINGS: TYPE IB**

| | |
|---|---|
| PRIMARY STRUCTURAL FRAME PER IBC TABLE 601: | 2 HOUR |
| EXTERIOR BEARING WALLS PER IBC TABLE 601: | 2 HOUR |
| INTERIOR BEARING WALLS PER IBC TABLE 601: | 2 HOUR |
| INTERIOR NON-BEARING WALLS PER IBC TABLE 601: | 0 HOUR |
| FLOOR CONSTRUCTION PER IBC TABLE 601: | 2 HOUR |
| ROOF CONSTRUCTION PER IBC TABLE 601: | 1 HOUR |
| SHAFT ENCLOSURES: | 2 HOUR |
| CORRIDORS (1020.1): | 0 HOUR |

**FIRE RESISTANCE RATINGS: TYPE IV**

| | |
|---|---|
| PRIMARY STRUCTURAL FRAME PER IBC TABLE 601: | HT |
| EXTERIOR BEARING WALLS PER IBC TABLE 601: | 2 HOUR |
| INTERIOR BEARING WALLS PER IBC TABLE 601: | HT |
| INTERIOR NON-BEARING WALLS PER IBC TABLE 601: | 0 HOUR |
| FLOOR CONSTRUCTION PER IBC TABLE 601: | HT |
| ROOF CONSTRUCTION PER IBC TABLE 601: | HT |
| SHAFT ENCLOSURES: | 2 HOUR |
| CORRIDORS (1020.1): | 0 HOUR |

**CORRIDOR WIDTHS REQUIREMENTS (TABLE 1020.2):**

| OCCUPANCY | MINIMUM |
|---|---|
| ANY FACILITIES NOT LISTED BELOW | 44 INCHES |
| MEP SYSTEMS OR EQUIPMENT | 24 INCHES |
| OCCUPANCY CAPACITY LESS THAN 50 | 36 INCHES |

## CODE PLAN LEGEND

| SYMBOL | DESCRIPTION | PROTECTION ELEMENTS |
|---|---|---|
| | REQUIRED EXIT - EXTERIOR | EXIT SIGNS. |
| | REQUIRED EXIT OR EXIT ACCESS - INTERIOR (ASSEMBLY OVER 50 & EXITS FROM FLOORS.) | EXIT SIGNS. |
| FE | NEW PARTIAL RECESSED FIRE EXTINGUISHER | 75'-0" MAX TRAVEL DISTANCE |
| FE | EXISTING FIRE EXTINGUISHER | 75'-0" MAX TRAVEL DISTANCE |
| | EXISTING EXIT SIGN | |
| | FIRE DEPARTMENT CONNECTION | |
| FACP | FIRE ALARM CONTROL PANEL | |
| | AREA OUT OF SCOPE | |
| | FIRE RATING - 2 HOUR | |
| | FIRE RATING - 4 HOUR | EXISTING AREA SEPARATION |

A01 BUILDING SUMMARY

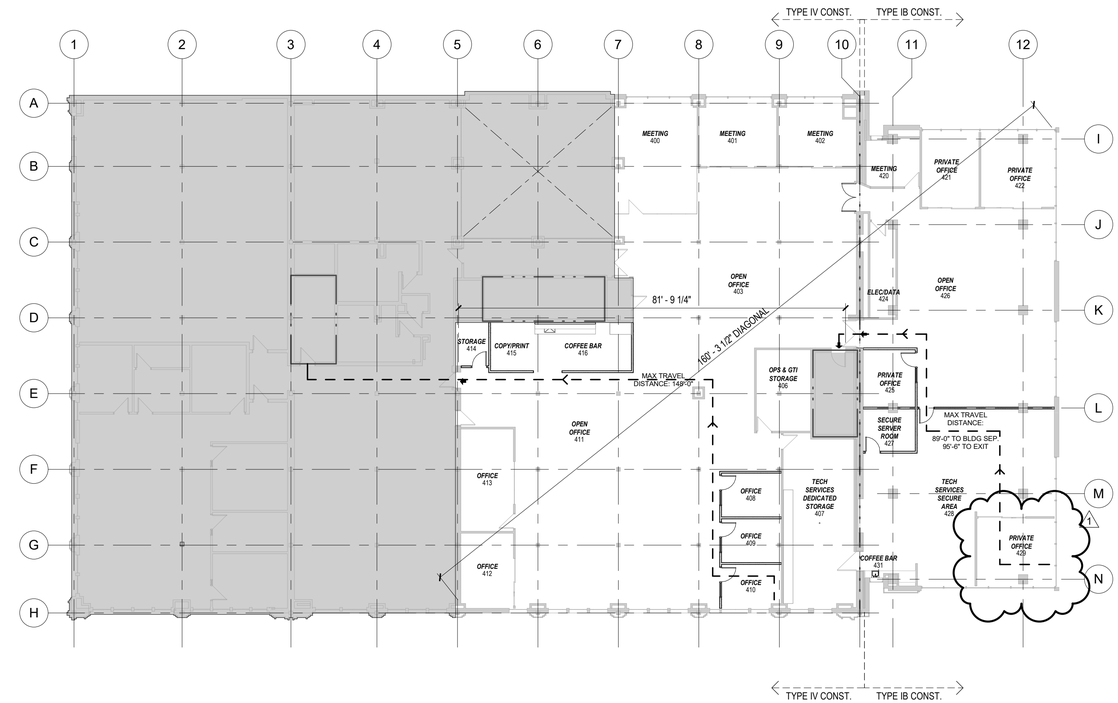


F07 CODE PLAN - LEVEL 04
RE: I05 / A400 1/16" = 1'-0"

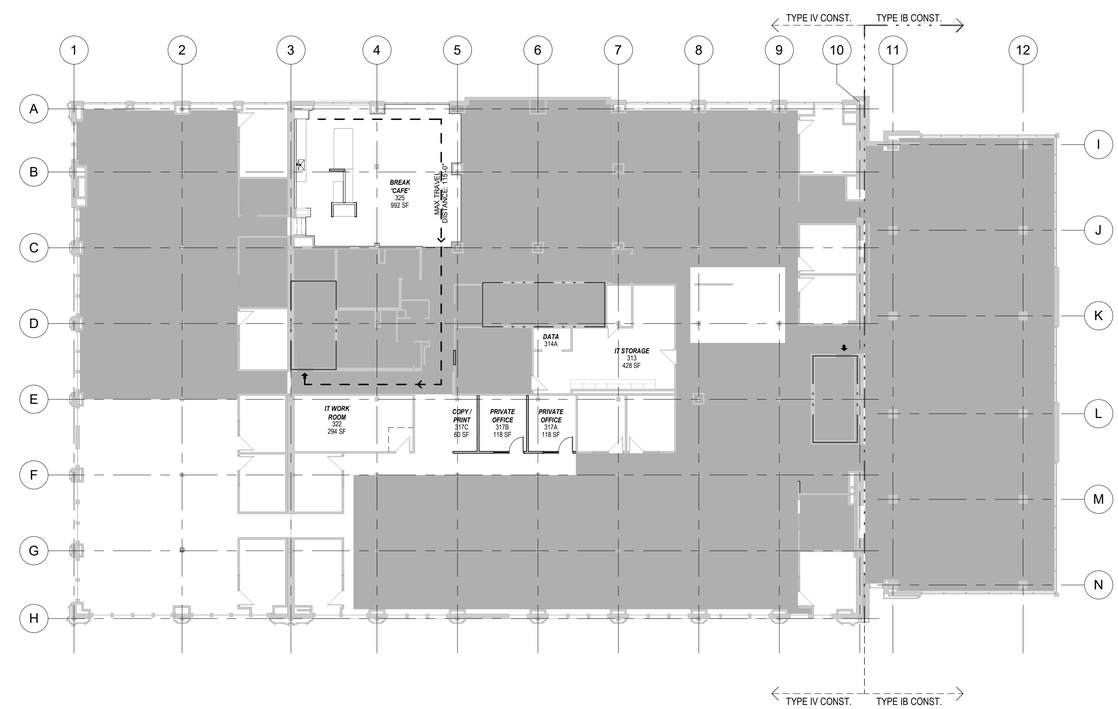


A07 CODE PLAN - LEVEL 03
RE: A01 / A400 1/16" = 1'-0"

MARC
Mid-America Regional Council

**MARC PHASE 1 OFFICE RENOVATION**

600 BROADWAY BLVD STE 200,
KANSAS CITY, MO 64105

odimo

MO CERT OF AUTH.: #2016000414
ODIMO PROJ. #: 211002


**OWNER**
ATTN: CAROL GONZALES,
DIRECTOR OF FINANCE AND ADMINISTRATION
600 BROADWAY, SUITE 200
KANSAS CITY, MO 64105
816.701.8204
CGONZALES@MARC.ORG

**ARCHITECT**
ATTN: AMY J. SLATTERY, AIA
ODIMO LLC
701 E 63RD STREET #210
KANSAS CITY, MO 64110
816.708.1500
ASLATTERY@ODIMO.US

**MEP ENGINEERING**
ATTN: BRAD LEWIS
BRANCHPATTERN, INC.
1508 GRAND BOULEVARD
KANSAS CITY, MO 64108
816.531.2121
BLEWIS@BRANCHPATTERN.COM


**ORIGINAL SHEET ISSUE DATE:** 05/31/2022

| △ | DATE | DESCRIPTION |
|---|---|---|
| 1 | 06/07/2022 | ADDENDUM 01 |

**ISSUE**
**BID / PERMIT SET**
05/31/2022

**SEAL / SIGNATURE**
STATE OF MISSOURI
AMY J. SLATTERY
NUMBER A-2007019930
ARCHITECT
06/07/2022
AMY SLATTERY - ARCHITECT - MO # A2007019930

**DESCRIPTION**
**CODE PLAN**

**G010**

©2022 Odimo

| PARTITION SYSTEM | | | | | | | | | | | | | | |
|---|---|---|---|---|---|---|---|---|---|---|---|---|---|---|
| | | | | | | PARTITION CORE | | | | FINISH HEIGHT | | | | |
| PARTITION ID PLAN SYMBOL | BASIC PARTITION THICKNESS | ACOUSTICAL RATING (STC) | ACOUSTICAL TEST NUMBER | INSULATION THICKNESS | GWB THICKNESS | STUD/FURRING SIZE | FURRING TYPE | METAL THICKNESS | STUD SPACING | TO STRUCTU ABV | PARTIAL HEIGHT | TOP OF EXIST. | TO UNDERSIDE CLG | REMARKS |
| Partition System A | | | | | | | | | | | | | | |
| A3 | 4 7/8" | - | - | 3 1/2" | 5/8" | 3 5/8" | STUD | 20 GA | 16" | YES | - | - | - | |
| A3a | 4 7/8" | - | - | - | 5/8" | 3 5/8" | STUD | 20 GA | 16" | - | YES | - | - | 6'-0" AFF |
| A3b | 4 7/8" | - | - | 3 1/2" | 5/8" | 3 5/8" | STUD | 20 GA | 16" | YES | - | YES | - | ON TOP OF EXISTING WALL - FROM APPROX 9'-0" AFF |
| A3c | 4 7/8" | - | - | 3 1/2" | 5/8" | 3 5/8" | STUD | 20 GA | 16" | - | - | - | YES | |
| Partition System D | | | | | | | | | | | | | | |
| D2 | 4 1/4" | - | - | - | 5/8" | 3 5/8" | STUD | 20 GA | 24" | - | YES | - | - | 4'-0" AFF |
| D3a | 4 1/4" | - | - | - | 5/8" | 3 5/8" | STUD | 20 GA | 24" | - | - | - | YES | |

1

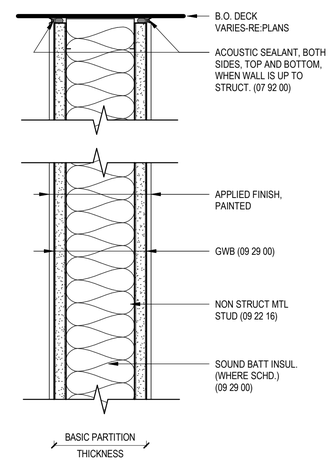


A10 PARTITION SYSTEM A

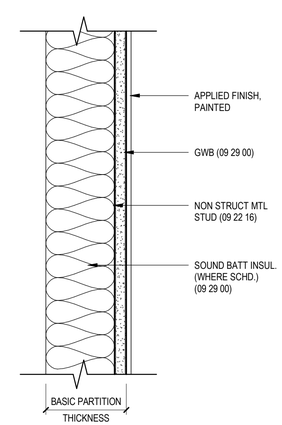


A13 PARTITION SYSTEM D

MARC
Mid-America Regional Council

**MARC PHASE 1 OFFICE RENOVATION**

600 BROADWAY BLVD STE 200,
KANSAS CITY, MO 64105

odimo™

MO CERT OF AUTH.: #2016000414
ODIMO PROJ. #: 211002


**OWNER**
ATTN: CAROL GONZALES,
DIRECTOR OF FINANCE AND ADMINISTRATION
600 BROADWAY, SUITE 200
KANSAS CITY, MO 64105
816.701.8204
CGONZALES@MARC.ORG

**ARCHITECT**
ATTN: AMY J. SLATTERY, AIA
ODIMO LLC
701 E 63RD STREET #210
KANSAS CITY, MO 64110
816.708.1500
ASLATTERY@ODIMO.US

**MEP ENGINEERING**
ATTN: BRAD LEWIS
BRANCHPATTERN, INC.
1508 GRAND BOULEVARD
KANSAS CITY, MO 64108
816.531.2121
BLEWIS@BRANCHPATTERN.COM


**ORIGINAL SHEET ISSUE DATE:** 05/31/2022

| △ | DATE | DESCRIPTION |
|---|---|---|
| 1 | 06/07/2022 | ADDENDUM 01 |

**ISSUE**

**BID / PERMIT SET**
05/31/2022

**SEAL / SIGNATURE**

**DESCRIPTION**

**WALL TYPES**

# G020

©2022 **Odimo**

IMAGE 1

IMAGE 2

## GENERAL NOTES

01 VERIFY ALL EXISTING CONDITIONS, DIMENSIONS, AND ELEVATIONS AND NOTIFY THE ARCHITECT-ENGINEER OF ANY DISCREPANCIES.

02 REMOVE IN THEIR ENTIRETY ALL EXISTING WALLS, DOORS, MILLWORK, PLUMBING FIXTURES ETC. AS REQUIRED TO EXECUTE THE DEMOLITION/CONSTRUCTION WORK DESCRIBED BY THE ARCHITECT-ENGINEER.

03 PROVIDE PROTECTION FOR ALL EXISTING BUILDING MATERIALS AND EQUIPMENT FROM DAMAGE DUE TO ANY DEMOLITION OR CONSTRUCTION-RELATED INCIDENT PERFORMED UNDER THIS CONTRACT. PROTECT ALL ITEMS TO REMAIN (WALLS, CEILINGS, PLUMBING FIXTURES (NOT INDICATED TO BE REMOVED), PIPING, HVAC UNITS, COLUMNS).

04 COORDINATE WITH THE ARCHITECT-ENGINEER ANY MATERIALS TO BE REUSED. VERIFY AND MAINTAIN THE FUNCTIONAL AND AESTHETIC INTEGRITY OF THE MATERIALS.

05 REMOVE ALL DEMOLITION MATERIALS FROM THE SITE UNLESS NOTED OTHERWISE. THE OWNER SHALL RESERVE THE RIGHT TO SALVAGE ANY MATERIALS. ANY TOILET ACCESSORIES AND LIGHT FIXTURES TO BE RETURNED TO THE OWNER SHALL BE PALLETIZED. G.C. TO COORDINATE DESIRED ITEMS TO BE RETURNED WITH OWNER.

06 OWNER RESERVES THE RIGHT OF REFUSAL ON ALL PRODUCTS BEING REMOVED. CONTRACTOR TO DISPOSE OF ALL PRODUCTS REFUSED.

08 VERIFY AND MAINTAIN THE LOCATION OF EXISTING POWER, COMMUNICATION AND DATA CABLES SO AS NOT TO INADVERTENTLY INTERRUPT THE CONTINUITY OF THEIR SERVICE.

09 REMOVE ALL ELECTRICAL DEVICES AND WIRING IN DEMOLISHED WALLS.

10 CAP ALL DISCONNECTED MECHANICAL PIPING LINES WITHIN THE WALL OR FLOOR. PATCH AND FINISH AS REQUIRED TO MATCH NEW OR EXISTING ADJACENT SURFACES.

11 ALL EXISTING CEILING HEIGHTS ARE SHOWN FOR REFERENCE ONLY. CONTRACTOR TO CONFIRM WHERE NECESSARY.

12 FIELD VERIFY ALL DEMO'D WALLS DO NOT SUPPORT ANY STRUCTURE. CONTACT ARCHITECT-ENGINEER IF ANY WALL SCHEDULED FOR DEMO SUPPORTS STRUCTURE.

## SHEET NOTES

01 DEMO EXISTING FURRED WALL, PLUMBING FIXTURES AND CASEWORK. SEE IMAGE 1.

02 DEMOLISH EXISTING SINK AND GARBAGE DISPOSAL FOR REPLACEMENT. COUNTER AND CASEWORK TO REMAIN. SEE IMAGE 2.

03 ADD ALT 03: DEMO EXISTING PLUMBING FIXTURES AND CASEWORK IN THEIR ENTIRETY.

04 EXISTING MARKERBOARD TO REMAIN. PROTECT DURING CONSTRUCTION.

DEMO
NEW WALL
EXISTING DOOR
EXISTING WALL TO REMAIN
NEW DOOR

BUILDING WALL SYMBOL LEGEND

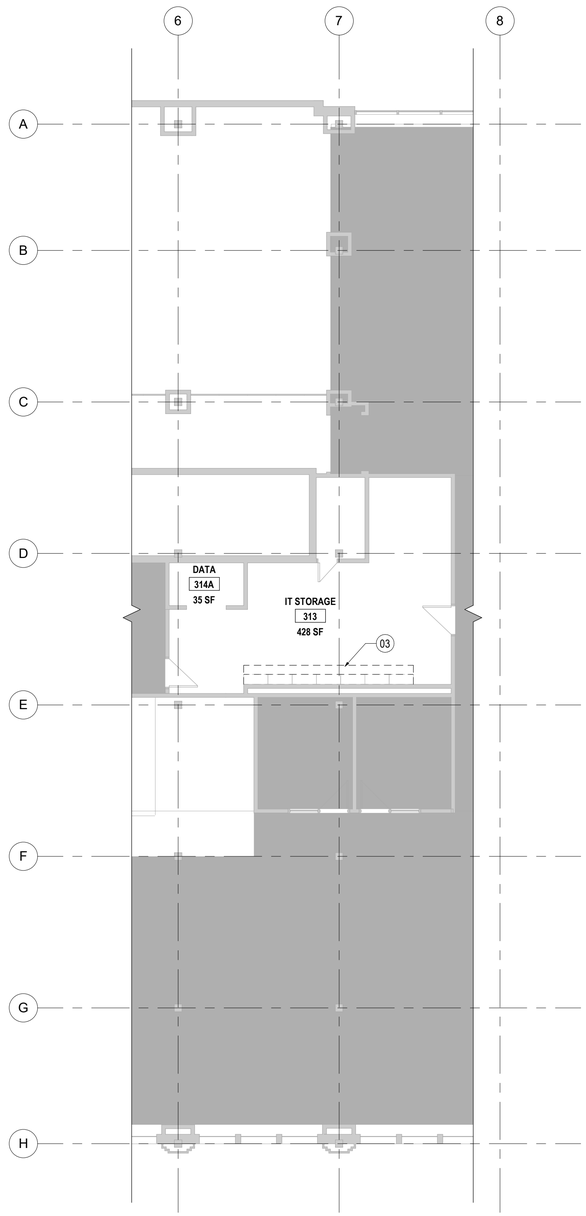


A01 DEMOLITION FLOOR PLAN - LEVEL 03

RE: A01 / A400 | 1/8" = 1'-0"

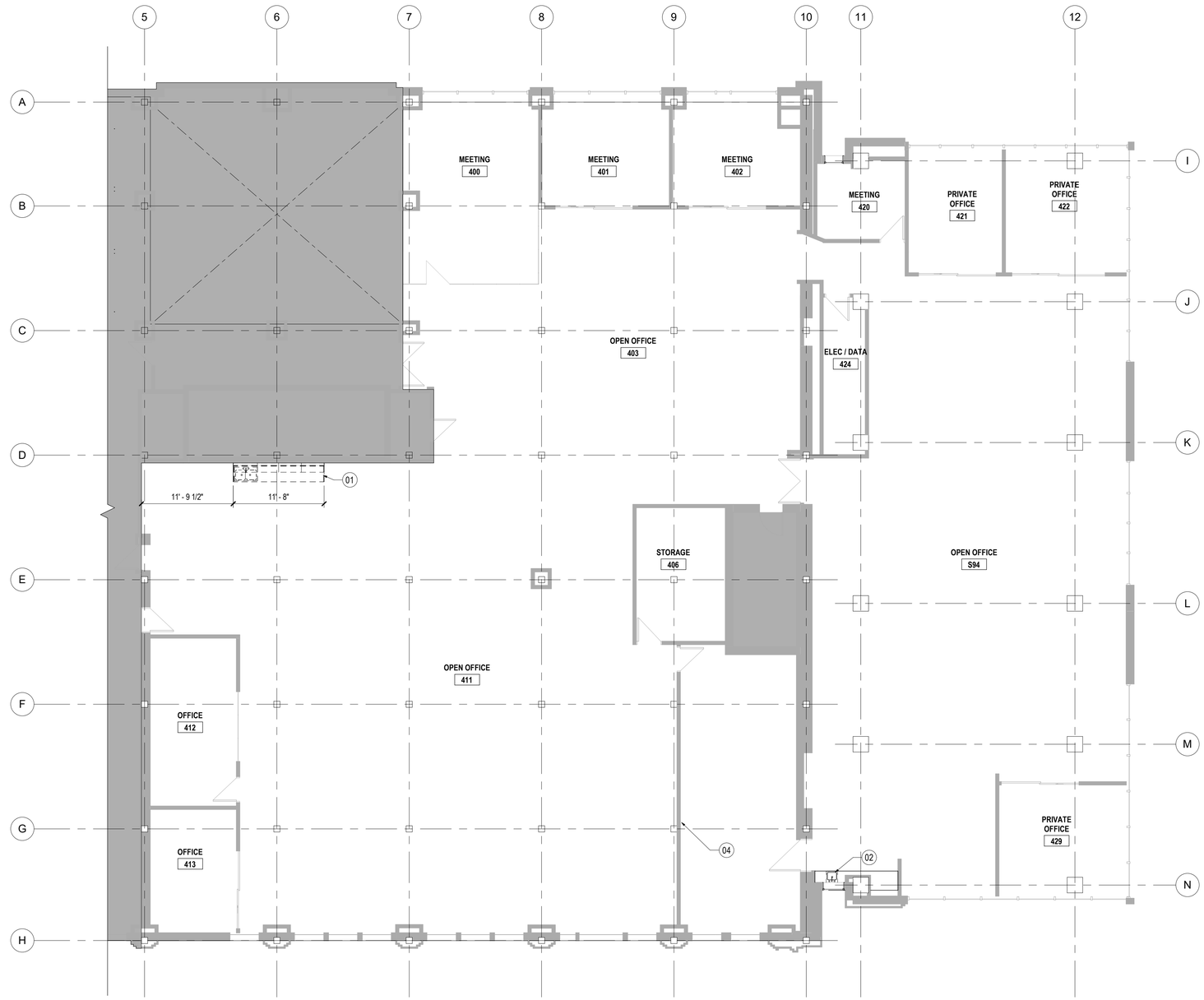


A05 DEMOLITION FLOOR PLAN - LEVEL 04

RE: I05 / A400 | 1/8" = 1'-0"

MARC
Mid-America Regional Council

**MARC PHASE 1 OFFICE RENOVATION**

600 BROADWAY BLVD STE 200,
KANSAS CITY, MO 64105

odimo

MO CERT OF AUTH.: #2016000414
ODIMO PROJ. #: 211002


**OWNER**
ATTN: CAROL GONZALES,
DIRECTOR OF FINANCE AND ADMINISTRATION
600 BROADWAY, SUITE 200
KANSAS CITY, MO 64105
816.701.8204
CGONZALES@MARC.ORG

**ARCHITECT**
ATTN: AMY J. SLATTERY, AIA
ODIMO LLC
701 E 63RD STREET #210
KANSAS CITY, MO 64110
816.708.1500
ASLATTERY@ODIMO.US

**MEP ENGINEERING**
ATTN: BRAD LEWIS
BRANCHPATTERN, INC.
1508 GRAND BOULEVARD
KANSAS CITY, MO 64108
816.531.2121
BLEWIS@BRANCHPATTERN.COM


**ORIGINAL SHEET ISSUE DATE:** 05/31/2022

| △ | DATE | DESCRIPTION |
|---|---|---|
| 1 | 06/07/2022 | ADDENDUM 01 |

**ISSUE**

**BID / PERMIT SET**
05/31/2022

**SEAL / SIGNATURE**

**DESCRIPTION**

**DEMOLITION - LEVEL 03 & 04**

# AD100

©2022 Odimo

IMAGE 1

## GENERAL NOTES

01 VERIFY ALL EXISTING CONDITIONS, DIMENSIONS, AND ELEVATIONS AND NOTIFY THE ARCHITECT-ENGINEER OF ANY DISCREPANCIES.

02 REMOVE IN THEIR ENTIRETY ALL EXISTING WALLS, DOORS, MILLWORK, PLUMBING FIXTURES ETC. AS REQUIRED TO EXECUTE THE DEMOLITION/CONSTRUCTION WORK DESCRIBED BY THE ARCHITECT-ENGINEER.

03 PROVIDE PROTECTION FOR ALL EXISTING BUILDING MATERIALS AND EQUIPMENT FROM DAMAGE DUE TO ANY DEMOLITION OR CONSTRUCTION-RELATED INCIDENT PERFORMED UNDER THIS CONTRACT. PROTECT ALL ITEMS TO REMAIN (WALLS, CEILINGS, PLUMBING FIXTURES (NOT INDICATED TO BE REMOVED), PIPING, HVAC UNITS, COLUMNS).

04 COORDINATE WITH THE ARCHITECT-ENGINEER ANY MATERIALS TO BE REUSED. VERIFY AND MAINTAIN THE FUNCTIONAL AND AESTHETIC INTEGRITY OF THE MATERIALS.

05 REMOVE ALL DEMOLITION MATERIALS FROM THE SITE UNLESS NOTED OTHERWISE. THE OWNER SHALL RESERVE THE RIGHT TO SALVAGE ANY MATERIALS. ANY TOILET ACCESSORIES AND LIGHT FIXTURES TO BE RETURNED TO THE OWNER SHALL BE PALLETIZED. G.C. TO COORDINATE DESIRED ITEMS TO BE RETURNED WITH OWNER.

06 OWNER RESERVES THE RIGHT OF REFUSAL ON ALL PRODUCTS BEING REMOVED. CONTRACTOR TO DISPOSE OF ALL PRODUCTS REFUSED.

08 VERIFY AND MAINTAIN THE LOCATION OF EXISTING POWER, COMMUNICATION AND DATA CABLES SO AS NOT TO INADVERTENTLY INTERRUPT THE CONTINUITY OF THEIR SERVICE.

09 REMOVE ALL ELECTRICAL DEVICES AND WIRING IN DEMOLISHED WALLS.

10 CAP ALL DISCONNECTED MECHANICAL PIPING LINES WITHIN THE WALL OR FLOOR. PATCH AND FINISH AS REQUIRED TO MATCH NEW OR EXISTING ADJACENT SURFACES.

11 ALL EXISTING CEILING HEIGHTS ARE SHOWN FOR REFERENCE ONLY. CONTRACTOR TO CONFIRM WHERE NECESSARY.

12 FIELD VERIFY ALL DEMO'D WALLS DO NOT SUPPORT ANY STRUCTURE. CONTACT ARCHITECT-ENGINEER IF ANY WALL SCHEDULED FOR DEMO SUPPORTS STRUCTURE.

## SHEET NOTES

01 DEMO EXISTING PENDANT LIGHT FIXTURES.

02 DEMO EXISTING LIGHTING. EXISTING MECHANICAL AND DEVICES TO REMAIN.

03 ADD ALT 01: TEMPORARILY REMOVE EXISTING CEILING TILE AND GRID TO EXTENT NEEDED FOR NEW CONSTRUCTION. PROTECT EXISTING CEILING TILES FOR MODIFICATION AND REINSTALLATION.

04 EXISTING LIGHTING TO REMAIN. SHORTEN LIGHTING RUN, REMOVE SECTION AND MOVE END CAP ACCORDINGLY. RE: ELECTRICAL.

05 DEMO EXISTING SOFFIT TO ALIGN WITH ADJACENT WALL. SEE IMAGE 1.

06 BASE BID: TEMPORARILY REMOVE EXISTING CEILING TILE AND GRID TO EXTENT NEEDED FOR NEW CONSTRUCTION. PROTECT EXISTING CEILING TILES FOR MODIFICATION AND REINSTALLATION.

07 REMOVE, PROTECT AND RELOCATE LIGHT FIXTURES.

DEMO

NEW WALL

EXISTING DOOR

EXISTING WALL TO REMAIN

NEW DOOR

BUILDING WALL SYMBOL LEGEND

A01 RCP - LEVEL - 04 DEMO

RE: I05 / A400 1/8" = 1'-0"

0' 2' 4' 8' 16'

MARC

Mid-America Regional Council

**MARC PHASE 1 OFFICE RENOVATION**

600 BROADWAY BLVD STE 200,
KANSAS CITY, MO 64105

odimo

MO CERT OF AUTH.: #2016000414
ODIMO PROJ. #: 211002


**OWNER**
ATTN: CAROL GONZALES,
DIRECTOR OF FINANCE AND ADMINISTRATION
600 BROADWAY, SUITE 200
KANSAS CITY, MO 64105
816.701.8204
CGONZALES@MARC.ORG

**ARCHITECT**
ATTN: AMY J. SLATTERY, AIA
ODIMO LLC
701 E 63RD STREET #210
KANSAS CITY, MO 64110
816.708.1500
ASLATTERY@ODIMO.US

**MEP ENGINEERING**
ATTN: BRAD LEWIS
BRANCHPATTERN, INC.
1508 GRAND BOULEVARD
KANSAS CITY, MO 64108
816.531.2121
BLEWIS@BRANCHPATTERN.COM


**ORIGINAL SHEET ISSUE DATE:** 05/31/2022

| △ | DATE | DESCRIPTION |
|---|---|---|
| 1 | 06/07/2022 | ADDENDUM 01 |

**ISSUE**

**BID / PERMIT SET**
05/31/2022

**SEAL / SIGNATURE**

STATE OF MISSOURI
AMY J. SLATTERY
NUMBER A-2007019930
ARCHITECT
06/07/2022

AMY SLATTERY - ARCHITECT - MO # 2007019930

**DESCRIPTION**

**RCP DEMOLITION - LEVEL 04**

# AD150

©2022 Odimo

## GENERAL NOTES

A ALL SHOWN HALFTONE ARE EXISTING CONDITIONS TO BE FIELD VERIFIED.

B INTERIOR PARTITIONS ARE DIMENSIONED FROM FACE OF FINISH TO FACE OF FINISH, UNO. MAINTAIN DIMENSIONS MARKED 'CLEAR' OR 'HOLD'. ALLOW FOR MATERIAL THICKNESSES INLUDING WALL BASE PROJECTIONS.

C WALL THICKNESSES ARE ACTUAL DIMENSIONS.

D REFER TO A600 FOR FINISH LEGEND, FINISH SCHEDULE, WALL TYPES, AND DOOR / FRAME INFORMATION.

E DOOR OPENINGS NOT LOCATED BY DIMENSION SHALL BE CENTERED IN WALL SHOWN OR LOCATED 4 INCHES FROM FINISH WALL TO FINISH JAMB, ALWAYS ALLOWING MINIMUM OF 18" FROM THE PULL SIDE OF THE DOOR TO THE INTERSECTING WALL.

F LINEAR LIGHT FIXTURES ARE DIMENSIONED TO CENTERLINE OF HOUSING.

G CEILING TILES ARE CENTERED IN ROOM, UNO AND ALL LIGHT FIXTURES ARE CENTERED IN CEILING TILES.

H FURNITURE LAYOUT SHOWN FOR REFERENCE ONLY. FURNITURE IS NOT INCLUDED IN THIS DOCUMENT SET AND WILL BE PROVIDED IN A SEPARATE FURNITURE PACKAGE TO BE PROVIDED TO OWNER FOR PROCUREMENT.

DEMO
NEW WALL
EXISTING DOOR
EXISTING WALL TO REMAIN
NEW DOOR

J12 BUILDING WALL SYMBOL LEGEND

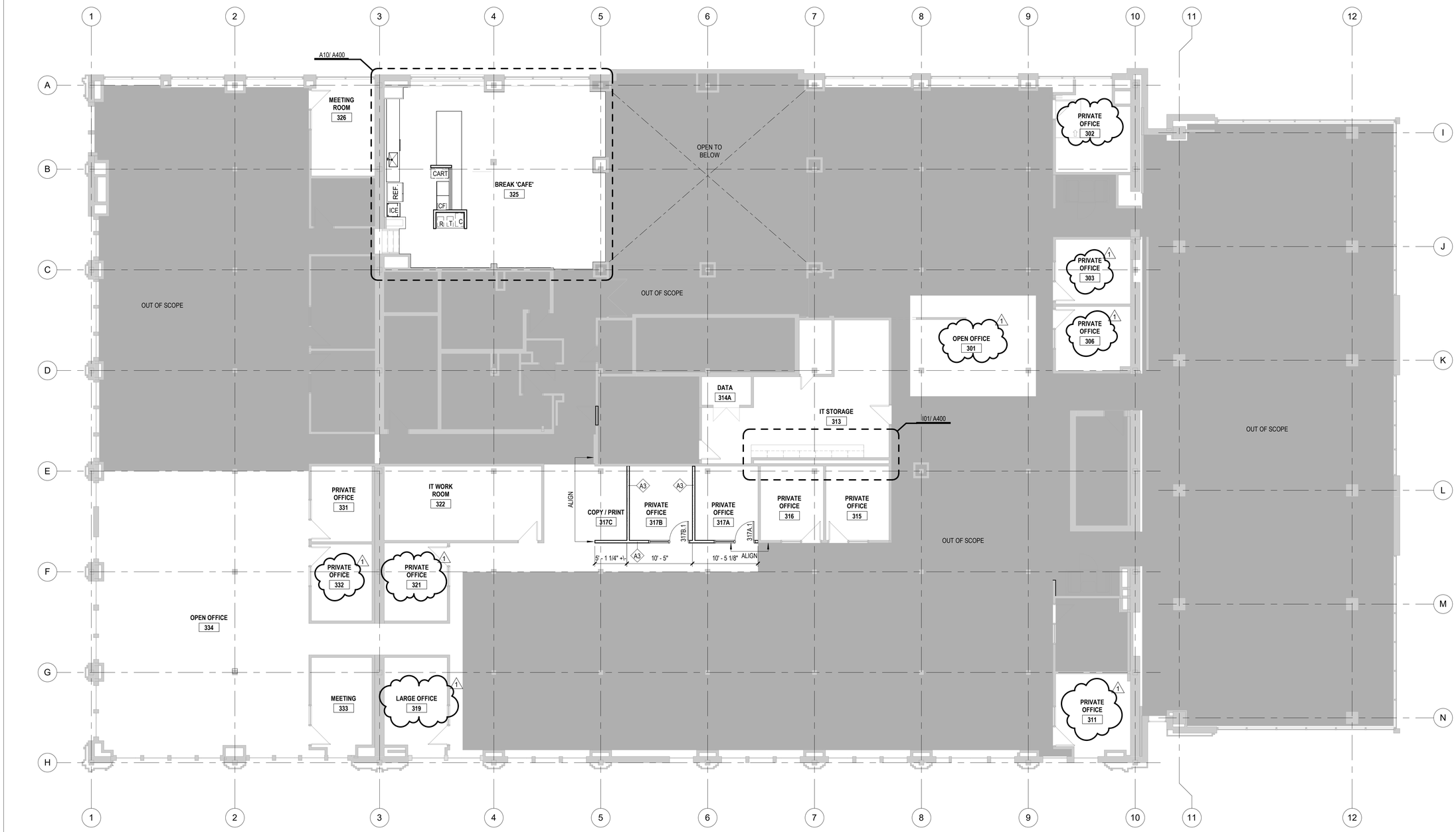


A01 LEVEL 03
RE: A01 / A400 1/8" = 1'-0"
0' 2' 4' 8' 16'

MARC
Mid-America Regional Council

**MARC PHASE 1 OFFICE RENOVATION**

600 BROADWAY BLVD STE 200,
KANSAS CITY, MO 64105

odimo

MO CERT OF AUTH.: #2016000414
ODIMO PROJ. #: 211002


**OWNER**
ATTN: CAROL GONZALES,
DIRECTOR OF FINANCE AND ADMINISTRATION
600 BROADWAY, SUITE 200
KANSAS CITY, MO 64105
816.701.8204
CGONZALES@MARC.ORG

**ARCHITECT**
ATTN: AMY J. SLATTERY, AIA
ODIMO LLC
701 E 63RD STREET #210
KANSAS CITY, MO 64110
816.708.1500
ASLATTERY@ODIMO.US

**MEP ENGINEERING**
ATTN: BRAD LEWIS
BRANCHPATTERN, INC.
1508 GRAND BOULEVARD
KANSAS CITY, MO 64108
816.531.2121
BLEWIS@BRANCHPATTERN.COM


**ORIGINAL SHEET ISSUE DATE:** 05/31/2022

| △ | DATE | DESCRIPTION |
|---|---|---|
| 1 | 06/07/2022 | ADDENDUM 01 |

**ISSUE**
**BID / PERMIT SET**
05/31/2022

**SEAL / SIGNATURE**

STATE OF MISSOURI
AMY J. SLATTERY
NUMBER A-2007019930
ARCHITECT
06/07/2022
AMY SLATTERY - ARCHITECT - MO # 2007019930

**DESCRIPTION**
**FLOOR PLAN - LEVEL 03**

**A103**

©2022 Odimo

## GENERAL NOTES

A ALL SHOWN HALFTONE ARE EXISTING CONDITIONS TO BE FIELD VERIFIED.

B INTERIOR PARTITIONS ARE DIMENSIONED FROM FACE OF FINISH TO FACE OF FINISH, UNO. MAINTAIN DIMENSIONS MARKED 'CLEAR' OR 'HOLD'. ALLOW FOR MATERIAL THICKNESSES INLUDING WALL BASE PROJECTIONS.

C WALL THICKNESSES ARE ACTUAL DIMENSIONS.

D REFER TO A600 FOR FINISH LEGEND, FINISH SCHEDULE, WALL TYPES, AND DOOR / FRAME INFORMATION.

E DOOR OPENINGS NOT LOCATED BY DIMENSION SHALL BE CENTERED IN WALL SHOWN OR LOCATED 4 INCHES FROM FINISH WALL TO FINISH JAMB, ALWAYS ALLOWING MINIMUM OF 18" FROM THE PULL SIDE OF THE DOOR TO THE INTERSECTING WALL.

F LINEAR LIGHT FIXTURES ARE DIMENSIONED TO CENTERLINE OF HOUSING.

G CEILING TILES ARE CENTERED IN ROOM, UNO AND ALL LIGHT FIXTURES ARE CENTERED IN CEILING TILES.

H FURNITURE LAYOUT SHOWN FOR REFERENCE ONLY. FURNITURE IS NOT INCLUDED IN THIS DOCUMENT SET, AND WILL BE PROVIDED IN A SEPARATE FURNITURE PACKAGE TO BE PROVIDED TO OWNER FOR PROCUREMENT.

## SHEET NOTES

01 PROVIDE NEW DOOR HARDWARE AT EXISTING DOOR TO COORDINATE WITH CARD ACCESS NEEDS. PROVIDE BALANCE OF HARDWARE AS NECESSARY.

02 POWER POLE. RE: MEP.

03 MAINTAIN 6' CLEAR PATH TO RM 407.

04 REPLACE EXISTING SINK. RE: MEP.

05 ADD ALT 01: MONITOR WALL W/ DOOR. PROVIDE BLOCKING AS REQ'D FOR MONITOR MOUNTING PER OWNER.

06 ADD ALT 02: PROVIDE NEW PLASTIC LAMINATE COUNTERTOP (PL02) WITH LEG SUPPORTS. PROVIDE 1-1/2" BLACK ADJUSTABLE METAL LEGS AT 4'-0" OC. COUNTER AT 2'-10" H.

07 ADD ALT 01: IN LIEU OF A3 WALL TYPE, PROVIDE A3c WALL TYPE AT NOTED LOCATIONS.

DEMO
NEW WALL
EXISTING DOOR
EXISTING WALL TO REMAIN
NEW DOOR

J12 BUILDING WALL SYMBOL LEGEND

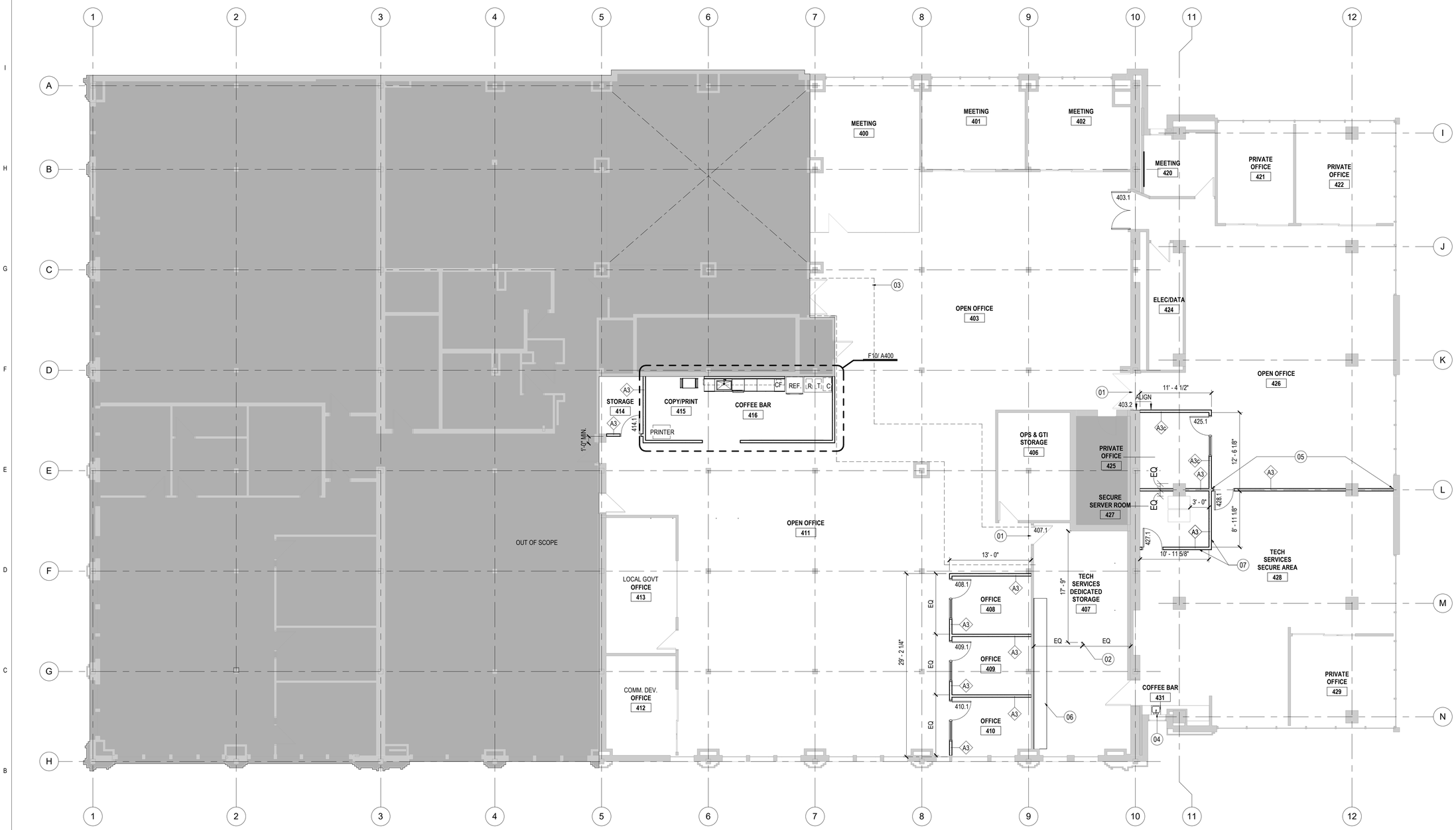


A01 LEVEL 04
RE: I05 / A400
1/8" = 1'-0"

MARC
Mid-America Regional Council

**MARC PHASE 1 OFFICE RENOVATION**

600 BROADWAY BLVD STE 200,
KANSAS CITY, MO 64105

odimo

MO CERT OF AUTH.: #2016000414
ODIMO PROJ. #: 211002


**OWNER**
ATTN: CAROL GONZALES,
DIRECTOR OF FINANCE AND ADMINISTRATION
600 BROADWAY, SUITE 200
KANSAS CITY, MO 64105
816.701.8204
CGONZALES@MARC.ORG

**ARCHITECT**
ATTN: AMY J. SLATTERY, AIA
ODIMO LLC
701 E 63RD STREET #210
KANSAS CITY, MO 64110
816.708.1500
ASLATTERY@ODIMO.US

**MEP ENGINEERING**
ATTN: BRAD LEWIS
BRANCHPATTERN, INC.
1508 GRAND BOULEVARD
KANSAS CITY, MO 64108
816.531.2121
BLEWIS@BRANCHPATTERN.COM


**ORIGINAL SHEET ISSUE DATE:** 05/31/2022

| △ | DATE | DESCRIPTION |
|---|---|---|
| 1 | 06/07/2022 | ADDENDUM 01 |

**ISSUE**
**BID / PERMIT SET**
05/31/2022

**SEAL / SIGNATURE**

STATE OF MISSOURI
AMY J. SLATTERY
NUMBER A-2007019930
ARCHITECT
06/07/2022
AMY SLATTERY - ARCHITECT - MO # 2007019930

**DESCRIPTION**
**FLOOR PLAN - LEVEL 04**

# A104

©2022 Odimo

## GENERAL NOTES

A THE GENERAL CONTRACTOR IS RESPONSIBLE FOR SUBMITTING A SPRINKLER HEAD LAYOUT TO OWNER'S REPRESENTATATIVE FOR APPROVAL PRIOR TO PERMITTING & INSTALLATION. aLL ROUTING OF PIPE AND HEAD LOCATIONS TO BE COORDINATED WITH FIELD CONDITIONS PRIOR TO SUBMITTAL.

B REFER TO MECHANICAL SHEETS FOR DETAILED INFORMATION ON DIFFUSERS. COORDINATE ALL FIXTURES WITH ELECTRICAL AND MECHANICAL PLANS. MECHANICAL CONTRACTOR TO COORDINATE DUCT WORK AROUND CURRENT LIGHTING LAYOUT PER RCP.

C DIFFUSER LOCATIONS ARE FOR INTENT PURPOSES ONLY. MECHANICAL CONTRACTOR TO COORDINATE EXACT LOCATIONS AND REQUIREMENTS AS NECESSARY.

D ALL OWNER PROVIDED FIXTURES ARE TO BE GENERAL CONTRACTOR INSTALLED.

E REFER TO FINISH LEGEND AND FINISH SCHEDLUE FOR ROOM CEILING FINISHES.

F COORDINATE ALL CEILING MOUNTED EQUIPMENT WITH CASEWORK BELOW.

G ALL EXISTING CEILING HEIGHTS ARE SHOWN FOR REFERENCE ONLY. CONTRACTOR TO CONFIRM WHERE NECESSARY.

H PROVIDE SLEEVES FOR CONDUITS PASSING THROUGH WALL BEING EXTENDED TO DECK. PROVIDE ACOUSTICAL SEALANT AT ALL PENETRATIONS.

J SPRINKLER CONTRACTOR TO ADJUST SPRINKLER HEADS IMPACTED BY WALLS EXTENDED TO DECK. IN AREAS OF LIGHT HAZARD OCCUPANCY, MAX SPACING OF 225 SQUARE FOOT PER SPRINKLER WITH VERIFICATION BY HYDRAULIC CALCULATIONS DESIGNED FOR A MINIMUM DISCHARGE DENSITY OF 0.10 GPM/SQUARE FOOT OVER THE MOST REMOTE 1,500 SQUARE FOOR OF AREA.

K IN ALL INDICATED LOCATIONS WHERE NEW WALLS ARE TO BE EXTEND TO DECK, REMOVE WALL BASE AND SALVAGE WALL BASE FOR REINSTALLATION. PREP WALL AND PAINT WALL FLOOR TO DECK. PAINT COLOR TO BE SELECTED BY ARCHITECT.

## SHEET NOTES

01 DUCT LOCATED ON TOP OF EXISTING WALL TO BE EXTENDED TO DECK. RELOCATE DUCT OFF WALL TO INTERIOR SIDE OF ENCLOSED ROOM. MAINTAIN AIR DISTRIBUTION TO SPACES AFTER WALL EXTENSION. CONTRACTOR TO CONFIRM ALL LOCATIONS AND NOTIFY THE ARCHITECT IF ADDITIONAL CONDITIONS EXIST.

02 EXISTING CEILING, LIGHTING MECHANICAL AND DEVICES TO REMAIN.

03 NEW LIGHTING DESIGN, RE: ELECTRICAL.

04 CONFIRM FIXTURE IS CENTERED OVER ISLAND BELOW.

05 DAMAGED CEILING TILE. REMOVE DAMAGED TILE AND REPLACE WITH ATTIC STOCK. COORDINATE AS NECESSARY WITH OWNER.

DEMO
NEW WALL
EXISTING DOOR
EXISTING WALL TO REMAIN
NEW DOOR

J12 BUILDING WALL SYMBOL LEGEND

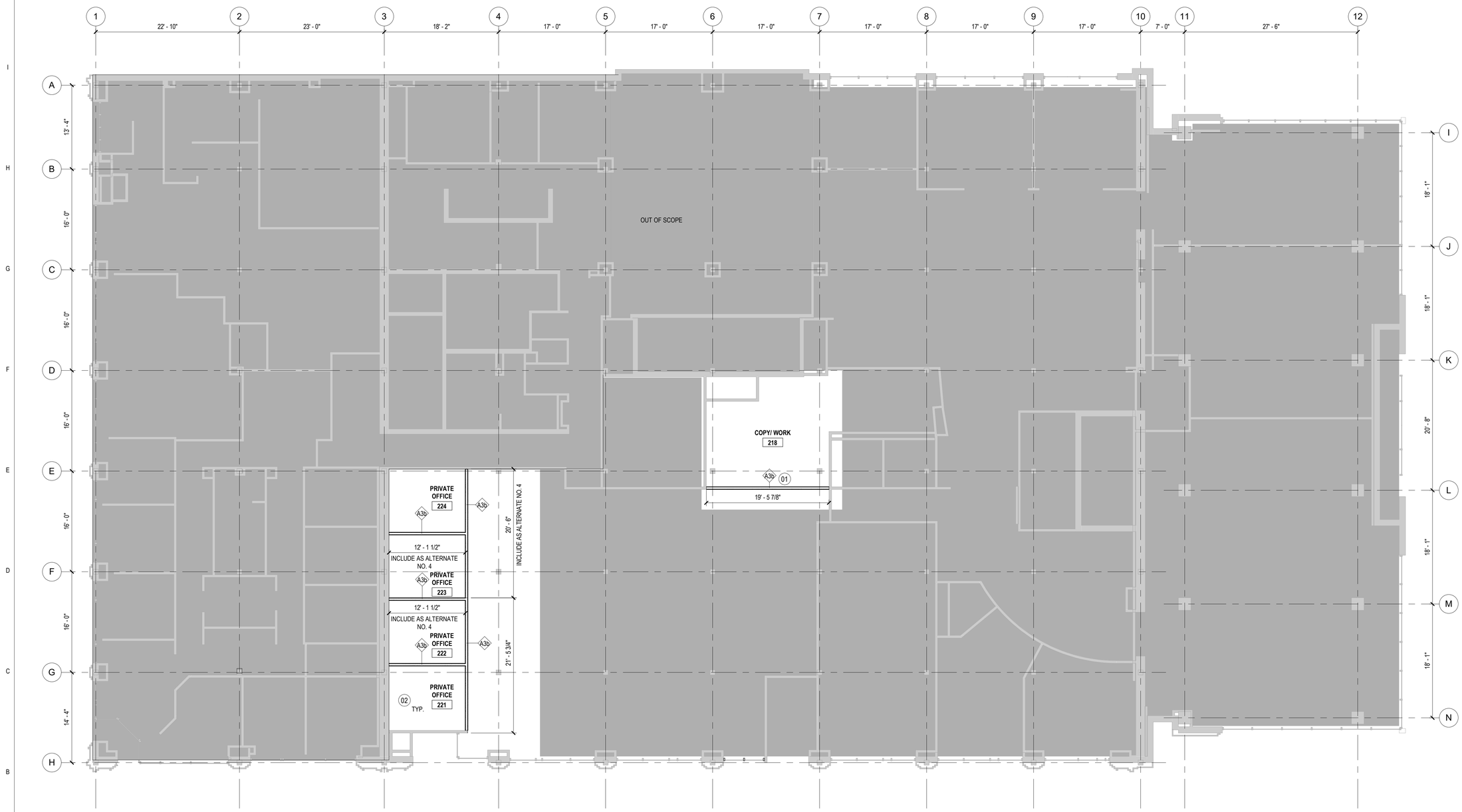


A01 RCP - LEVEL - 02 - TOW
1/8" = 1'-0"

MARC
Mid-America Regional Council

**MARC PHASE 1 OFFICE RENOVATION**

600 BROADWAY BLVD STE 200,
KANSAS CITY, MO 64105

odimo

MO CERT OF AUTH.: #2016000414
ODIMO PROJ. #: 211002


**OWNER**
ATTN: CAROL GONZALES,
DIRECTOR OF FINANCE AND ADMINISTRATION
600 BROADWAY, SUITE 200
KANSAS CITY, MO 64105
816.701.8204
CGONZALES@MARC.ORG

**ARCHITECT**
ATTN: AMY J. SLATTERY, AIA
ODIMO LLC
701 E 63RD STREET #210
KANSAS CITY, MO 64110
816.708.1500
ASLATTERY@ODIMO.US

**MEP ENGINEERING**
ATTN: BRAD LEWIS
BRANCHPATTERN, INC.
1508 GRAND BOULEVARD
KANSAS CITY, MO 64108
816.531.2121
BLEWIS@BRANCHPATTERN.COM


**ORIGINAL SHEET ISSUE DATE:** 05/31/2022

| △ | DATE | DESCRIPTION |
|---|---|---|
| 1 | 06/07/2022 | ADDENDUM 01 |

**ISSUE**
**BID / PERMIT SET**
05/31/2022

**SEAL / SIGNATURE**

STATE OF MISSOURI
AMY J. SLATTERY
NUMBER A-2007019930
ARCHITECT
06/07/2022
AMY SLATTERY - ARCHITECT - MO # 2007019930

**DESCRIPTION**
**REFLECTED CEILING PLAN - LEVEL 02**

# A152

©2022 Odimo

## GENERAL NOTES

A THE GENERAL CONTRACTOR IS RESPONSIBLE FOR SUBMITTING A SPRINKLER HEAD LAYOUT TO OWNER'S REPRESENTATATIVE FOR APPROVAL PRIOR TO PERMITTING & INSTALLATION. aLL ROUTING OF PIPE AND HEAD LOCATIONS TO BE COORDINATED WITH FIELD CONDITIONS PRIOR TO SUBMITTAL.

B REFER TO MECHANICAL SHEETS FOR DETAILED INFORMATION ON DIFFUSERS. COORDINATE ALL FIXTURES WITH ELECTRICAL AND MECHANICAL PLANS. MECHANICAL CONTRACTOR TO COORDINATE DUCT WORK AROUND CURRENT LIGHTING LAYOUT PER RCP.

C DIFFUSER LOCATIONS ARE FOR INTENT PURPOSES ONLY. MECHANICAL CONTRACTOR TO COORDINATE EXACT LOCATIONS AND REQUIREMENTS AS NECESSARY.

D ALL OWNER PROVIDED FIXTURES ARE TO BE GENERAL CONTRACTOR INSTALLED.

E REFER TO FINISH LEGEND AND FINISH SCHEDLUE FOR ROOM CEILING FINISHES.

F COORDINATE ALL CEILING MOUNTED EQUIPMENT WITH CASEWORK BELOW.

G ALL EXISTING CEILING HEIGHTS ARE SHOWN FOR REFERENCE ONLY. CONTRACTOR TO CONFIRM WHERE NECESSARY.

H PROVIDE SLEEVES FOR CONDUITS PASSING THROUGH WALL BEING EXTENDED TO DECK. PROVIDE ACOUSTICAL SEALANT AT ALL PENETRATIONS.

## SHEET NOTES

01 DUCT LOCATED ON TOP OF EXISTING WALL TO BE EXTENDED TO DECK. RELOCATE DUCT OFF WALL TO INTERIOR SIDE OF ENCLOSED ROOM. MAINTAIN AIR DISTRIBUTION TO SPACES AFTER WALL EXTENSION. CONTRACTOR TO CONFIRM ALL LOCATIONS AND NOTIFY THE ARCHITECT IF ADDITIONAL CONDITIONS EXIST.

02 EXISTING CEILING, LIGHTING MECHANICAL AND DEVICES TO REMAIN.

03 NEW LIGHTING DESIGN, RE: ELECTRICAL.

04 CONFIRM FIXTURE IS CENTERED OVER ISLAND BELOW.

05 DAMAGED CEILING TILE. REMOVE DAMAGED TILE AND REPLACE WITH ATTIC STOCK. COORDINATE AS NECESSARY WITH OWNER.

DEMO
NEW WALL
EXISTING DOOR
EXISTING WALL TO REMAIN
NEW DOOR

J12 BUILDING WALL SYMBOL LEGEND

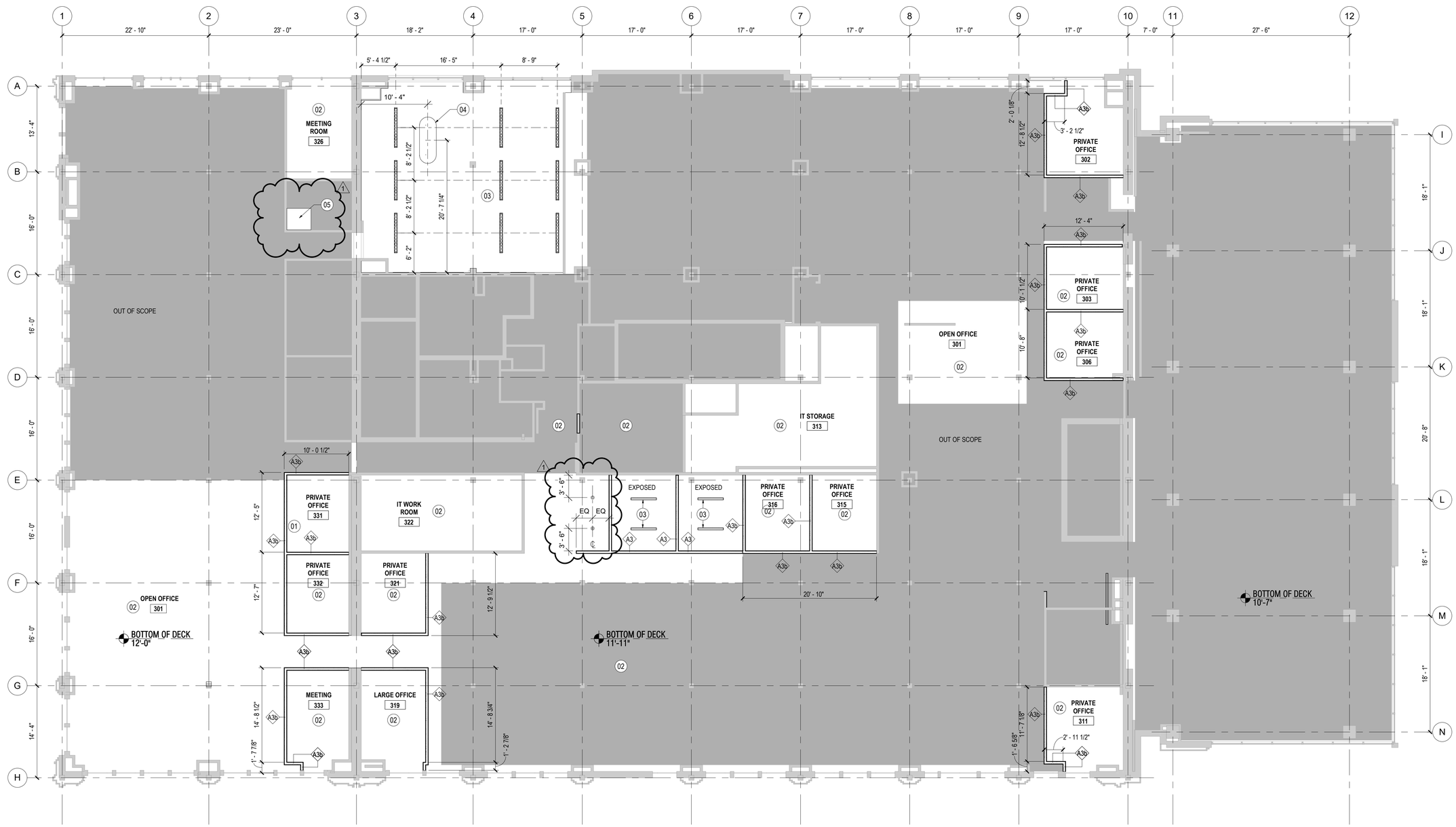


A01 REFLECTED CEILING PLAN - LEVEL 03
RE: A01 / A400 1/8" = 1'-0"

**MARC**
Mid-America Regional Council

**MARC PHASE 1 OFFICE RENOVATION**

600 BROADWAY BLVD STE 200,
KANSAS CITY, MO 64105

odimo

MO CERT OF AUTH.: #2016000414
ODIMO PROJ. #: 211002


**OWNER**
ATTN: CAROL GONZALES,
DIRECTOR OF FINANCE AND ADMINISTRATION
600 BROADWAY, SUITE 200
KANSAS CITY, MO 64105
816.701.8204
CGONZALES@MARC.ORG

**ARCHITECT**
ATTN: AMY J. SLATTERY, AIA
ODIMO LLC
701 E 63RD STREET #210
KANSAS CITY, MO 64110
816.708.1500
ASLATTERY@ODIMO.US

**MEP ENGINEERING**
ATTN: BRAD LEWIS
BRANCHPATTERN, INC.
1508 GRAND BOULEVARD
KANSAS CITY, MO 64108
816.531.2121
BLEWIS@BRANCHPATTERN.COM


**ORIGINAL SHEET ISSUE DATE:** 05/31/2022

| △ | DATE | DESCRIPTION |
|---|---|---|
| 1 | 06/07/2022 | ADDENDUM 01 |

**ISSUE**
**BID / PERMIT SET**
05/31/2022

**SEAL / SIGNATURE**
STATE OF MISSOURI
AMY J. SLATTERY
NUMBER A-2007019930
ARCHITECT
06/07/2022
AMY SLATTERY - ARCHITECT - MO # 2007019930

**DESCRIPTION**
**REFLECTED CEILING PLAN - LEVEL 03**

△1
**A153**

©2022 Odimo

## GENERAL NOTES

A THE GENERAL CONTRACTOR IS RESPONSIBLE FOR SUBMITTING A SPRINKLER HEAD LAYOUT TO OWNER'S REPRESENTATATIVE FOR APPROVAL PRIOR TO PERMITTING & INSTALLATION. aLL ROUTING OF PIPE AND HEAD LOCATIONS TO BE COORDINATED WITH FIELD CONDITIONS PRIOR TO SUBMITTAL.

B REFER TO MECHANICAL SHEETS FOR DETAILED INFORMATION ON DIFFUSERS. COORDINATE ALL FIXTURES WITH ELECTRICAL AND MECHANICAL PLANS. MECHANICAL CONTRACTOR TO COORDINATE DUCT WORK AROUND CURRENT LIGHTING LAYOUT PER RCP.

C DIFFUSER LOCATIONS ARE FOR INTENT PURPOSES ONLY. MECHANICAL CONTRACTOR TO COORDINATE EXACT LOCATIONS AND REQUIREMENTS AS NECESSARY.

D ALL OWNER PROVIDED FIXTURES ARE TO BE GENERAL CONTRACTOR INSTALLED.

E REFER TO FINISH LEGEND AND FINISH SCHEDLUE FOR ROOM CEILING FINISHES.

F COORDINATE ALL CEILING MOUNTED EQUIPMENT WITH CASEWORK BELOW.

G ALL EXISTING CEILING HEIGHTS ARE SHOWN FOR REFERENCE ONLY. CONTRACTOR TO CONFIRM WHERE NECESSARY.

H PROVIDE SLEEVES FOR CONDUITS PASSING THROUGH WALL BEING EXTENDED TO DECK. PROVIDE ACOUSTICAL SEALANT AT ALL PENETRATIONS.

## SHEET NOTE

01 EXISTING CEILING, LIGHTING MECHANICAL AND DEVICES TO REMAIN.
02 ADD ALT 01: ALTER EXISTING GRID AS NECESSARY AROUND NEW WALL. REINSTALL EXISTING CEILING TILE.
03 NEW LIGHTING DESIGN, REFER TO ELECT.
04 EXISTING MINI-SPLIT TO REMAIN.
05 NEW MINI-SPLIT, REFER TO MECH.
06 REUSE EXISTING CEILING TILE AND LIGHTING IN NEW LAYOUT.
07 EXISTING CEILING, HVAC, AND LIGHTING LOCATION TO REMAIN. RETROFIT LIGHTING WITH NEW LED BULBS.
08 BASE BID: ALTER EXISTING GRID AS NECESSARY AROUND NEW WALL. REINSTALL EXISTING CEILING TILE.
09 NEW LIGHTING TO MATCH EXISTING.
10 EXISTING LIGHTING TO REMAIN, MOVE LIGHTING TO NEW LOCATION AS SHOWN ON DRAWINGS.
11 PATCH AND REPAIR HEADER AT DOOR FROM REMOVAL OF FIRE SHUTTER. PAINT TO MATCH ADJACENT. CONFIRM CONDITION WITH ARCHITECT AS NECESSARY.

DEMO
NEW WALL
EXISTING DOOR
EXISTING WALL TO REMAIN
NEW DOOR

J12 BUILDING WALL SYMBOL LEGEND

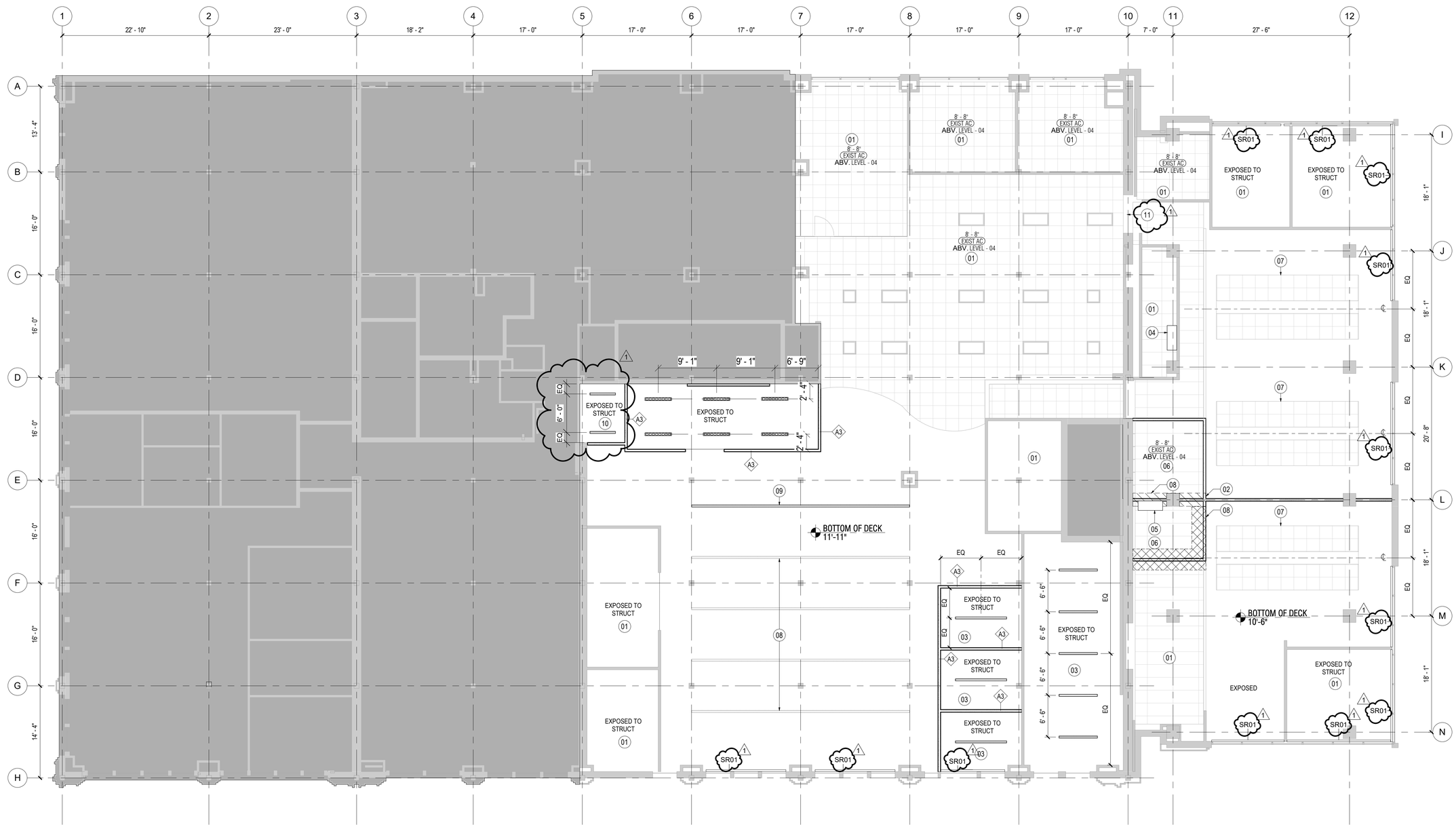


A01 RCP - LEVEL - 04
RE: I05 / A400 1/8" = 1'-0"

MARC
Mid-America Regional Council

**MARC PHASE 1 OFFICE RENOVATION**

600 BROADWAY BLVD STE 200,
KANSAS CITY, MO 64105

odimo

MO CERT OF AUTH.: #2016000414
ODIMO PROJ. #: 211002


**OWNER**
ATTN: CAROL GONZALES,
DIRECTOR OF FINANCE AND ADMINISTRATION
600 BROADWAY, SUITE 200
KANSAS CITY, MO 64105
816.701.8204
CGONZALES@MARC.ORG

**ARCHITECT**
ATTN: AMY J. SLATTERY, AIA
ODIMO LLC
701 E 63RD STREET #210
KANSAS CITY, MO 64110
816.708.1500
ASLATTERY@ODIMO.US

**MEP ENGINEERING**
ATTN: BRAD LEWIS
BRANCHPATTERN, INC.
1508 GRAND BOULEVARD
KANSAS CITY, MO 64108
816.531.2121
BLEWIS@BRANCHPATTERN.COM


**ORIGINAL SHEET ISSUE DATE:** 05/31/2022

| △ | DATE | DESCRIPTION |
|---|---|---|
| 1 | 06/07/2022 | ADDENDUM 01 |

**ISSUE**
**BID / PERMIT SET**
05/31/2022

**SEAL / SIGNATURE**

STATE OF MISSOURI
AMY J. SLATTERY
NUMBER A-2007019930
ARCHITECT
06/07/2022
AMY SLATTERY - ARCHITECT - MO # 2007019930

**DESCRIPTION**
**REFLECTED CEILING PLAN - LEVEL 04**

# A154

©2022 Odimo

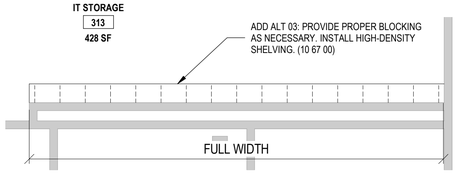


I01 ENLARGED PLAN - ALTERNATE 03
RE: A01 / A103 1/4" = 1'-0"

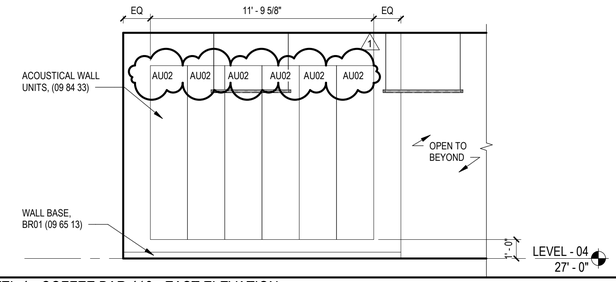


I05 LEVEL 4 - COFFEE BAR 416 - EAST ELEVATION
RE: F10 / A400 1/4" = 1'-0"

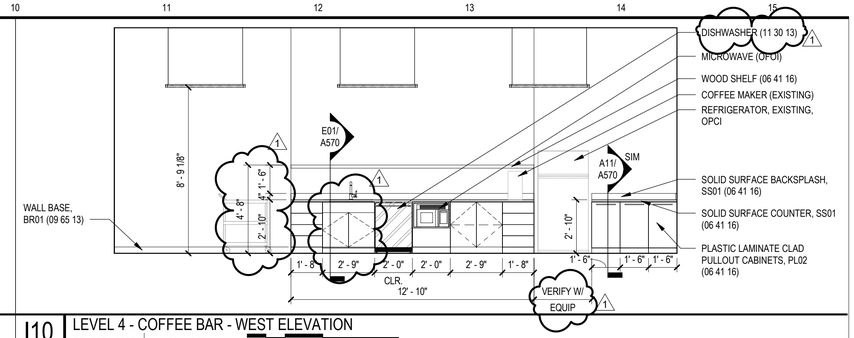


I10 LEVEL 4 - COFFEE BAR - WEST ELEVATION
RE: F10 / A400 1/4" = 1'-0"

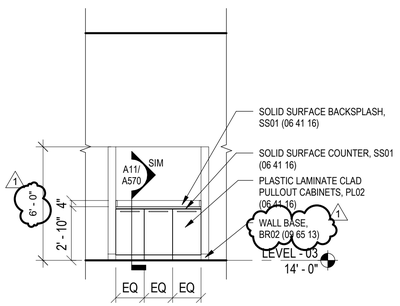


F01 LEVEL 3 - BREAK 315 - WEST ELEVATION 2
RE: A01 / A103.2 1/4" = 1'-0"

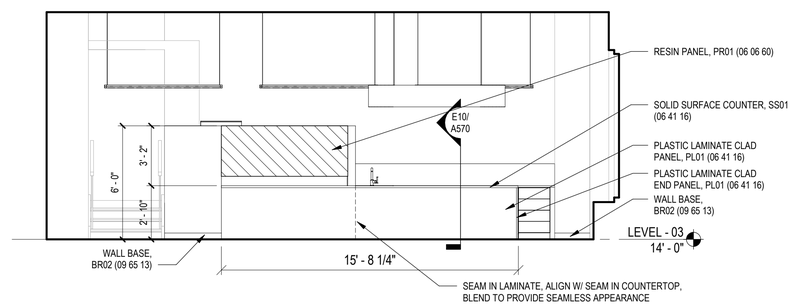


F04 LEVEL 3 - BREAK 315 - SOUTH ELEVATION 2
RE: A10 / A400 1/4" = 1'-0"

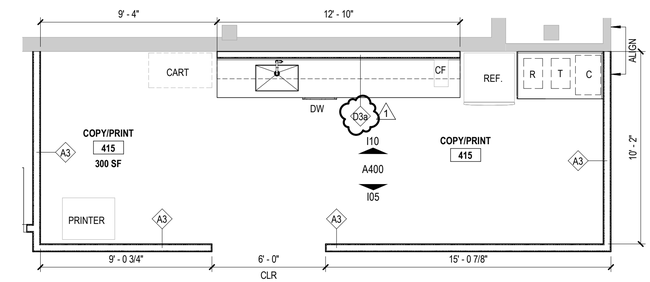


F10 ENLARGED FLOOR PLAN - LEVEL 04 - COFFEE BAR 416
RE: A01 / A104 1/4" = 1'-0"

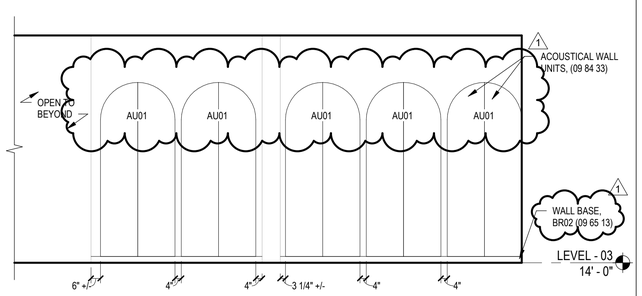


C01 LEVEL 3 - BREAK 315 - EAST ELEVATION
RE: A10 / A400 1/4" = 1'-0"

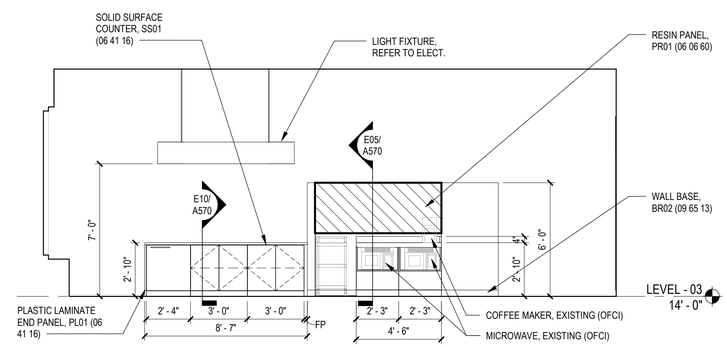


C05 LEVEL 3 - BREAK 315 - NORTH ELEVATION
RE: A10 / A400 1/4" = 1'-0"

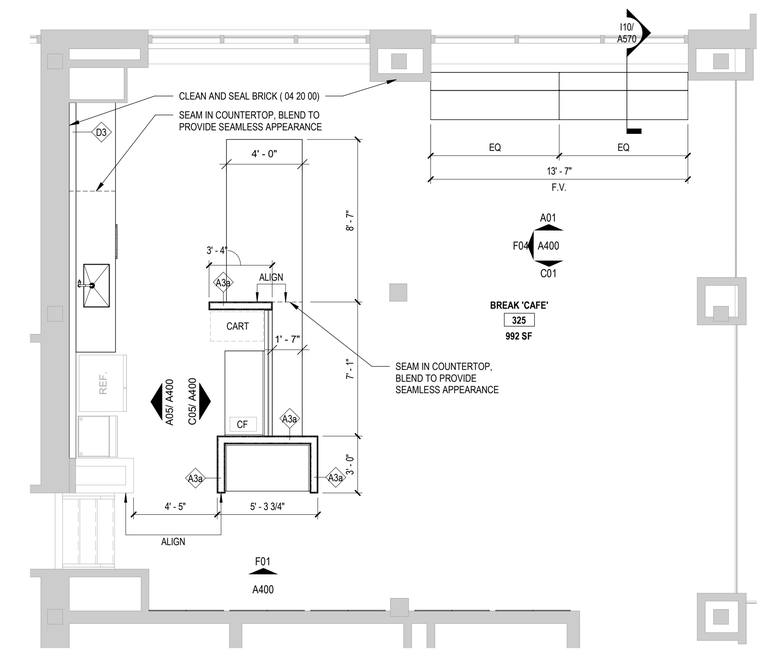


A10 ENLARGED FLOOR PLAN - LEVEL 03 - BREAK 'CAFE' 325
RE: A01 / A103 1/4" = 1'-0"

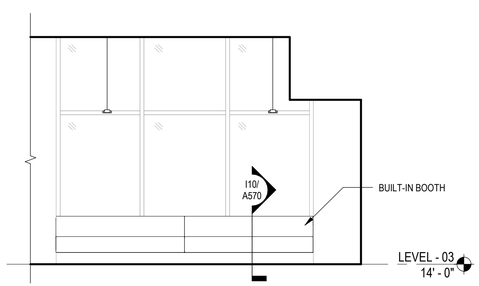


A01 LEVEL 3 - BREAK 315 - WEST ELEVATION 1
RE: A10 / A400 1/4" = 1'-0"

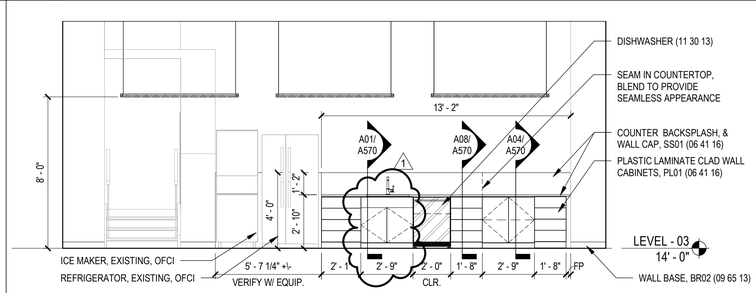


A05 LEVEL 3 - BREAK 315 - SOUTH ELEVATION
RE: A10 / A400 1/4" = 1'-0"

MARC
Mid-America Regional Council

**MARC PHASE 1 OFFICE RENOVATION**

600 BROADWAY BLVD STE 200,
KANSAS CITY, MO 64105

odimo

MO CERT OF AUTH.: #2016000414
ODIMO PROJ. #: 211002


**OWNER**
ATTN: CAROL GONZALES,
DIRECTOR OF FINANCE AND ADMINISTRATION
600 BROADWAY, SUITE 200
KANSAS CITY, MO 64105
816.701.8204
CGONZALES@MARC.ORG

**ARCHITECT**
ATTN: AMY J. SLATTERY, AIA
ODIMO LLC
701 E 63RD STREET #210
KANSAS CITY, MO 64110
816.708.1500
ASLATTERY@ODIMO.US

**MEP ENGINEERING**
ATTN: BRAD LEWIS
BRANCHPATTERN, INC.
1508 GRAND BOULEVARD
KANSAS CITY, MO 64108
816.531.2121
BLEWIS@BRANCHPATTERN.COM


**ORIGINAL SHEET ISSUE DATE:** 05/31/2022

| △ | DATE | DESCRIPTION |
|---|---|---|
| 1 | 06/07/2022 | ADDENDUM 01 |

**ISSUE**
**BID / PERMIT SET**
05/31/2022

**SEAL / SIGNATURE**

**DESCRIPTION**
**ENLARGED PLANS & INTERIOR ELEVATIONS**

# A400

©2022 Odimo

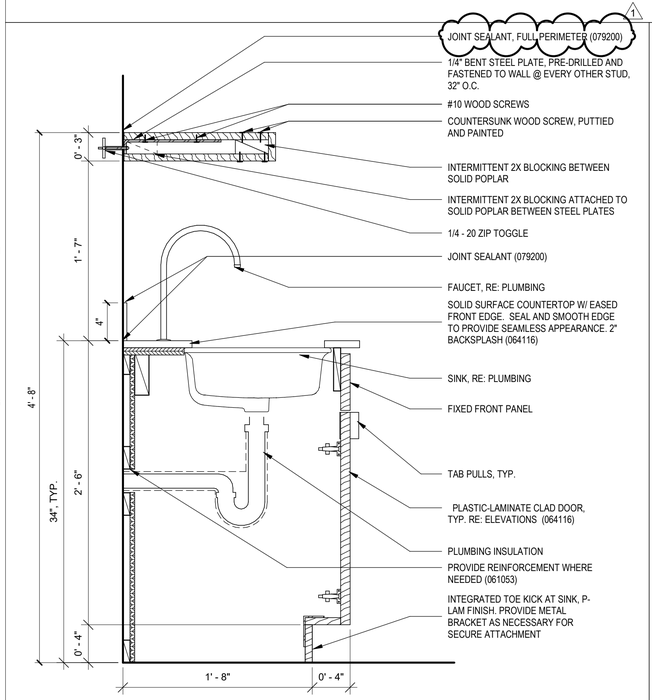


E01 SECTION DETAIL - COFFEE BAR - CASEWORK
RE: I10 / A400 | 1 1/2" = 1'-0"

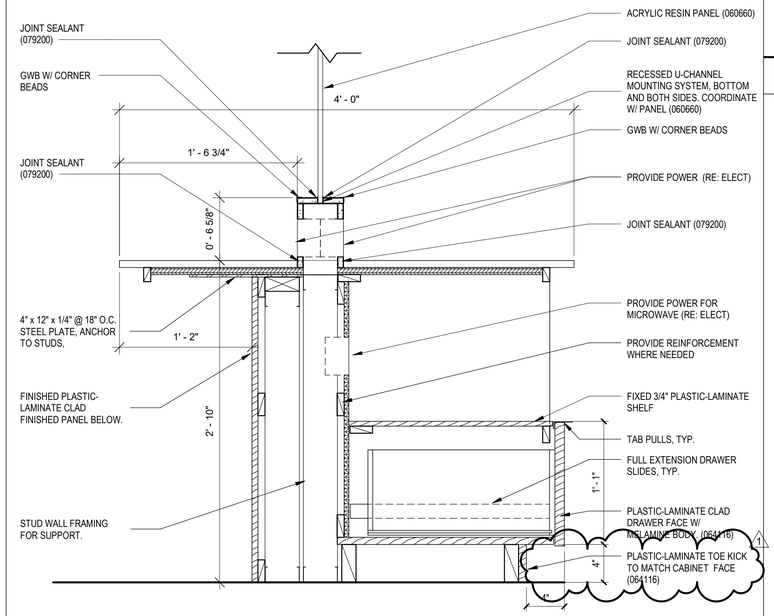


E05 SECTION DETAIL - ISLAND CASEWORK
RE: C05 / A400 | 1 1/2" = 1'-0"

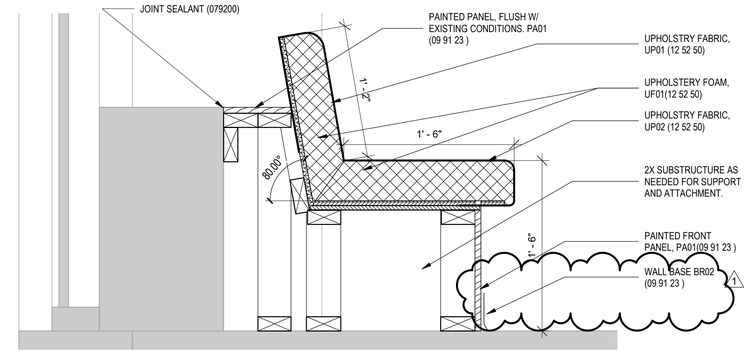


I10 SECTION DETAIL - BREAK 'CAFE' 325 BOOTH
RE: A01 / A400 | 1 1/2" = 1'-0"

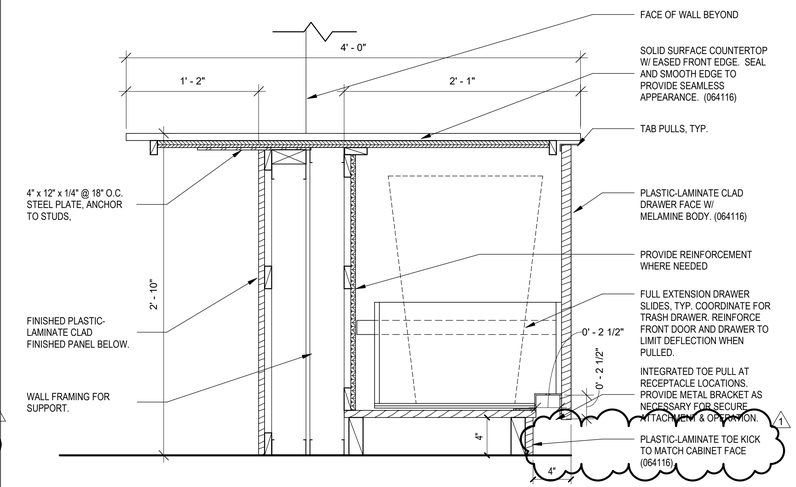


E10 SECTION DETAIL - ISLAND
RE: C05 / A400 | 1 1/2" = 1'-0"

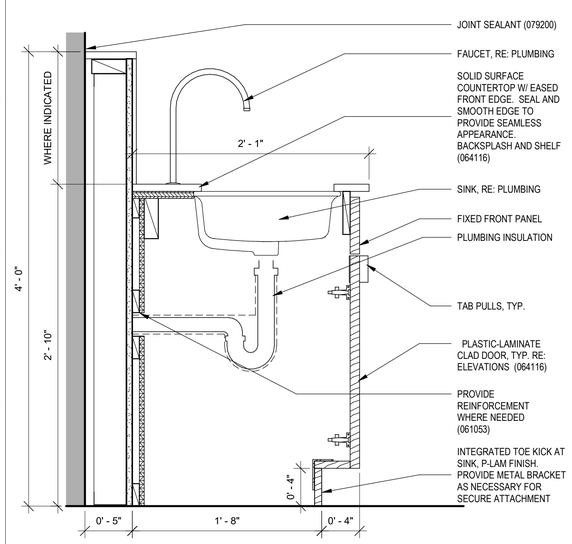


A01 SECTION DETAIL - BASE CABINET SINK
RE: A05 / A400 | 1 1/2" = 1'-0"

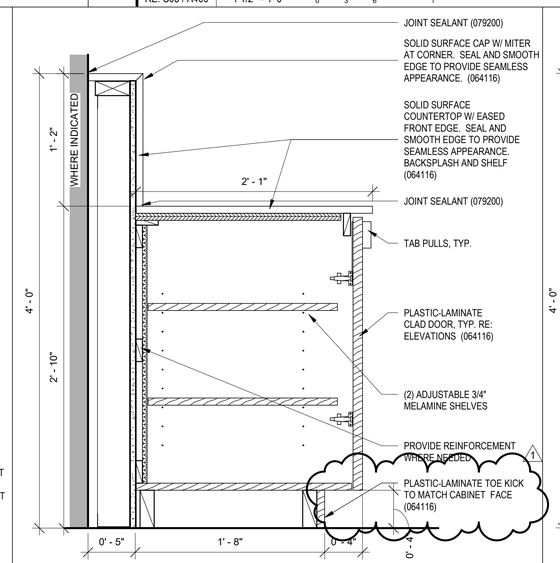


A04 SECTION DETAIL - BASE CABINET DOORS
RE: A05 / A400 | 1 1/2" = 1'-0"

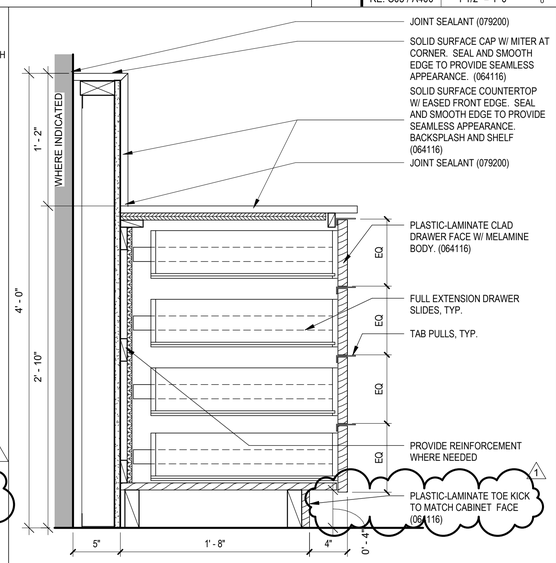


A08 SECTION DETAIL - BASE CABINET 4 DRAWERS
RE: A05 / A400 | 1 1/2" = 1'-0"

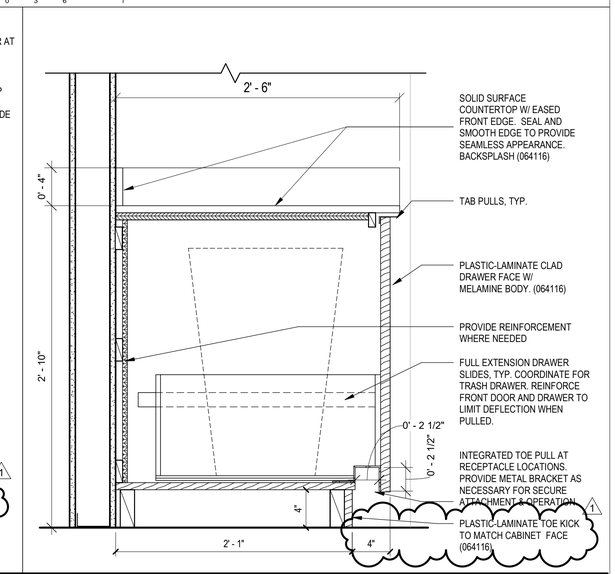


A11 SECTION DETAIL - BREAK 'CAFE' 325 - WASTE RECEPTACLE
RE: F01 / A400 | 1 1/2" = 1'-0"

MARC
Mid-America Regional Council

**MARC PHASE 1 OFFICE RENOVATION**

600 BROADWAY BLVD STE 200,
KANSAS CITY, MO 64105

odimo™

MO CERT OF AUTH.: #2016000414
ODIMO PROJ. #: 211002


**OWNER**
ATTN: CAROL GONZALES,
DIRECTOR OF FINANCE AND ADMINISTRATION
600 BROADWAY, SUITE 200
KANSAS CITY, MO 64105
816.701.8204
CGONZALES@MARC.ORG

**ARCHITECT**
ATTN: AMY J. SLATTERY, AIA
ODIMO LLC
701 E 63RD STREET #210
KANSAS CITY, MO 64110
816.708.1500
ASLATTERY@ODIMO.US

**MEP ENGINEERING**
ATTN: BRAD LEWIS
BRANCHPATTERN, INC.
1508 GRAND BOULEVARD
KANSAS CITY, MO 64108
816.531.2121
BLEWIS@BRANCHPATTERN.COM


**ORIGINAL SHEET ISSUE DATE:** 05/31/2022

| △ | DATE | DESCRIPTION |
|---|---|---|
| 1 | 06/07/2022 | ADDENDUM 01 |

**ISSUE**
**BID / PERMIT SET**
05/31/2022

**SEAL / SIGNATURE**

**DESCRIPTION**
**INTERIOR SECTION DETAILS**

**A570**

©2022 Odimo

## FINISH & MATERIAL INDEX

| CODE | DESCRIPTION | SECTION | BASIS OF DESIGN/MANUFACTURER | MODEL/COLOR | SIZE | REMARKS |
|---|---|---|---|---|---|---|
| DIVISION 06: WOODS, PLASTICS & COMPOSITES | | | | | | |
| PL01 | PLASTIC LAMINATE | 06 41 16 | FORMICA | 8238-PX, BLUSH, PLEX FINISH | - | - |
| PL02 | PLASTIC LAMINATE | 06 41 16 | FORMICA COLOR CORE 2 | 7223C-58 NEW WHITE, MATTE TEXTURE | - | - |
| PR01 | PANEL, RESIN | 06 06 60 | 3FORM | 1/2" VARIA, SEAWEED + JUNIPER, CENTERED, SANDSTONE/SANDSTONE | 1/2" THICK | REFER TO SPEC FOR MOUNTING SYSTEM |
| SS01 | SOLID SURFACE | 06 41 16 | RECYCLED SURFACES | G-46 | 3/4" THICK | - |
| DIVISION 09: FINISHES | | | | | | |
| AU01 | ACOUSTICAL, WALL UNIT | 09 84 33 | IMPACT ACOUSTICS | FYLO, ARCHISONIC, MOSS 439, 1/2" THICK | SEE ELEVATIONS | REFER TO SPEC |
| AU02 | ACOUSTICAL, WALL UNIT | 09 84 33 | IMPACT ACOUSTICS | FYLO, ARCHISONIC, NORDIC PINE 311, 1/2" THICK | SEE ELEVATIONS | REFER TO SPEC |
| BR01 | BASE, RESILIENT | 09 65 13 | TARKETT | COLOR: TO MATCH EXISTING | 4-IN | CONTRACTOR TO VERIFY. |
| BR02 | BASE, RESILIENT | 09 65 13 | TARKETT | MACADAMIA WG, TG5 | 4-IN | - |
| FR01 | FLOOR, RESILIENT TILE | 09 65 19 | FORBO, MARMOLEUM | MODULAR, T3716 MERCURY | 10" X 20" | - |
| PA01 | PAINT | 09 91 23 | SHERWIN WILLIAMS | ALABASTER, SW 7008 | - | REFER TO SPEC FOR FINISH. |
| PA02 | PAINT | 09 91 23 | SHERWIN WILLIAMS | ALYSSUM, SW 6589 | - | REFER TO SPEC FOR FINISH |
| PA03 | PAINT | 09 91 23 | SHERWIN WILLIAMS | COLOR: TO MATCH EXISTING | - | REFER TO SPEC FOR FINISH, CONTRACTOR TO VERIFY EXISTING. |
| DIVISION 12: FURNISHINGS | | | | | | |
| SR01 | SHADE, ROLLER | 12 24 13 | MECHOSHADE | ECOVEIL, 1550 SERIES 3% OPEN, 1570 SHADOW GREY; MANUAL SHADE, MECHO SLIMLINE TRACK | REFER TO RCPS | - |
| UF01 | FOAM, UPHOLSTERY | 12 52 50 | HIGH DENSITY POLYURETHANE | DACRON WRAPPED FOAM, LINED | 4" THICKNESS | FLAT SEAMS W/ SQUARE EDGES, TOP STITCHING |
| UP01 | FABRIC, UPHOLSTERY | 12 52 50 | CARNEIGE, XOREL | METEOR, 64527 W 2006 | SEE DETAILS | REFER TO SPEC |
| UP02 | FABRIC, UPHOLSTERY | 12 52 50 | CARNEIGE, XOREL | ELLIPSE EMBROIDER, 6105W 21 | SEE DETAILS | REFER TO SPEC |

1

## DOOR SCHEDULE

| DOOR NO. | DOOR TYPE | DOOR WIDTH | DOOR HEIGHT | DOOR MATERIAL | FRAME TYPE | FRAME MATERIAL | FIRE RATING | HDWR | PHASING |
|---|---|---|---|---|---|---|---|---|---|
| 317A.1 | D1 | 3' - 0" | 7' - 0" | WD | F2 | HM | | 01 | New Construction |
| 317B.1 | D1 | 3' - 0" | 7' - 0" | WD | F2 | HM | | 01 | New Construction |
| 403.1 | D2 | 6' - 0" | 6' - 8" | HM | F1 | HM | 3 HR | 04 | New Construction |
| 403.2 | D2 | 5' - 8" | 6' - 8" | EXIST. | EXIST. | EXIST. | | 06 | Existing |
| 407.1 | D1 | 3' - 0" | 7' - 0" | EXIST. | EXIST. | EXIST. | | 05 | Existing |
| 408.1 | D1 | 3' - 0" | 7' - 0" | WD | F2 | HM | | 01 | New Construction |
| 409.1 | D1 | 3' - 0" | 7' - 0" | WD | F2 | HM | | 01 | New Construction |
| 410.1 | D1 | 3' - 0" | 7' - 0" | WD | F2 | HM | | 01 | New Construction |
| 414.1 | D1 | 3' - 0" | 7' - 0" | WD | F1 | HM | | 02 | New Construction |
| 425.1 | D1 | 3' - 0" | 7' - 0" | WD | F2 | HM | | 01 | New Construction |
| 427.1 | D1 | 3' - 0" | 7' - 0" | WD | F1 | HM | | 02 | New Construction |
| 428.1 | D3 | 3' - 0" | 7' - 0" | WD | F1 | HM | | 03 | New Construction |

1 NOTE: CONTRACTOR TO COORDINATE NEW HARDWARE WITH EXISTING DOORS WHERE NECESSARY. FIELD VERIFY ALL LOCATIONS.

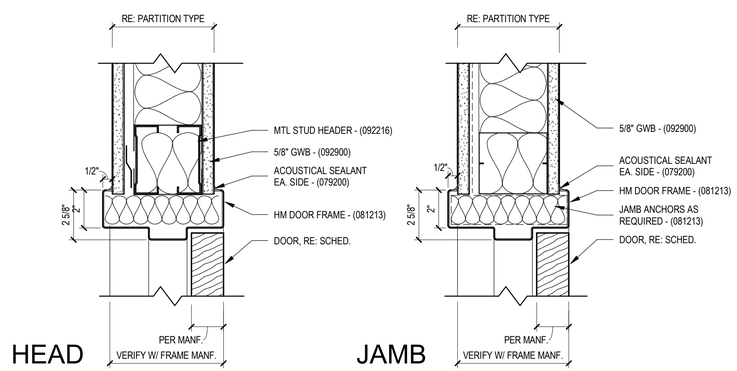


A04 TYP. DOOR DETAILS

3" = 1'-0"

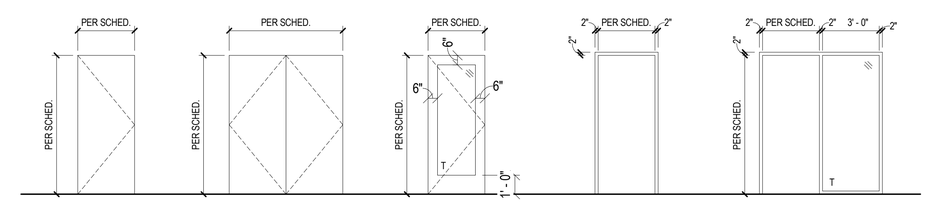


**D1**
SINGLE FLUSH DOOR
MAT. PER SCHED.
INTERIOR
RATING PER SCHED.
**PER 08 11 13 & 08 14 16**

**D2**
DOUBLE FLUSH DOOR
MAT. PER SCHED.
INTERIOR
RATING PER SCHED.
**PER 08 11 13 & 08 14 16**

**D3**
FULL LITE GLAZING
MAT. PER SCHED.
INTERIOR
RATING PER SCHED.
**PER 08 11 13 & 08 14 16**

**F1**
HOLLOW METAL
INTERIOR
RATING PER DOOR
PAINT TO MATCH ADJ. WALL, UNO
**PER 08 11 13**

**F2**
HOLLOW METAL W/ INTEGRAL SIDELITE
INTERIOR
RATING PER DOOR
GLAZING PER SPEC
PAINT TO MATCH ADJ. WALL, UNO
**PER 08 11 13**

A09 DOOR & FRAME LEGEND

MARC
Mid-America Regional Council

# MARC PHASE 1 OFFICE RENOVATION

600 BROADWAY BLVD STE 200,
KANSAS CITY, MO 64105

odimo™

MO CERT OF AUTH.: #2016000414
ODIMO PROJ. #: 211002


**OWNER**
ATTN: CAROL GONZALES,
DIRECTOR OF FINANCE AND ADMINISTRATION
600 BROADWAY, SUITE 200
KANSAS CITY, MO 64105
816.701.8204
CGONZALES@MARC.ORG

**ARCHITECT**
ATTN: AMY J. SLATTERY, AIA
ODIMO LLC
701 E 63RD STREET #210
KANSAS CITY, MO 64110
816.708.1500
ASLATTERY@ODIMO.US

**MEP ENGINEERING**
ATTN: BRAD LEWIS
BRANCHPATTERN, INC.
1508 GRAND BOULEVARD
KANSAS CITY, MO 64108
816.531.2121
BLEWIS@BRANCHPATTERN.COM


**ORIGINAL SHEET ISSUE DATE:** 05/31/2022

| △ | DATE | DESCRIPTION |
|---|---|---|
| 1 | 06/07/2022 | ADDENDUM 01 |

**ISSUE**

**BID / PERMIT SET**
05/31/2022

**SEAL / SIGNATURE**

**DESCRIPTION**

**DOOR & FINISH SCHEDULES**

# A600

©2022 Odimo

## FINISH LEGEND

**ROOM FINISH TAG**
ROOM NAME
ROOM #
FLOOR FINISH
BASE FINISH
PRIMARY WALL FINISH
INTERIOR FINISH MATERIALS INDEX
INTERIOR ROOM FINISH REMARKS. RE: GENERAL NOTES

EX00 — ACCENT WALL FINISH/COLOR DESIGNATED WITH DASHED LINES AND FINISH NOTE

## GENERAL NOTES

01 FLOOR FINISH PATTERN SHALL BE CENTERED IN ROOM U.N.O.
02 FLOOR FINISH MATERIAL TO BE INSTALLED UNDER TOE KICKS OF CASEWORK/MILLWORK, UNDER OPEN COUNTERTOPS & EQUIPMENT.
03 FLOORING MATERIAL / COLOR TRANSITIONS SHALL OCCUR AT DOOR STOP, U.N.O.
04 ALIGN ALL WALL & FLOOR TILE JOINTS U.N.O.
05 TRANSTION WALL BASE AT INSIDE CORNERS U.N.O.
06 INSTALL MECHANICALLY FASTENED TRANSITION STRIPS AT ALL FLOOR FINISH MATERIAL CHANGES.
07 REFER TO SHEET G001 FOR ADDITIONAL GENERAL NOTES THAT ARE APPLICABLE.
08 ALL CLOSETS & ALCOVES WITHOUT A SPACE IDENTIFICATION NUMBER SHALL HAVE THE SAME FLOOR FINISHES AS ADJOINING SPACES.
09 ON LEVEL 04: PAINT ALL WALLS IMPACTED BY SCOPE OF WORK PA01 UNLESS NOTED OTHERWISE.
10 ON LEVEL 02/03: PAINT ALL WALLS IMPACTED BY SCOPE OF WORK PA03 UNLESS NOTED OTHERWISE. MATCH EXISTING SHEEN.
11 WHERE MULTIPLE FINISHES ARE INDICATED, REFER TO ELEVATIONS FOR EXTENT OF MATERIALS.

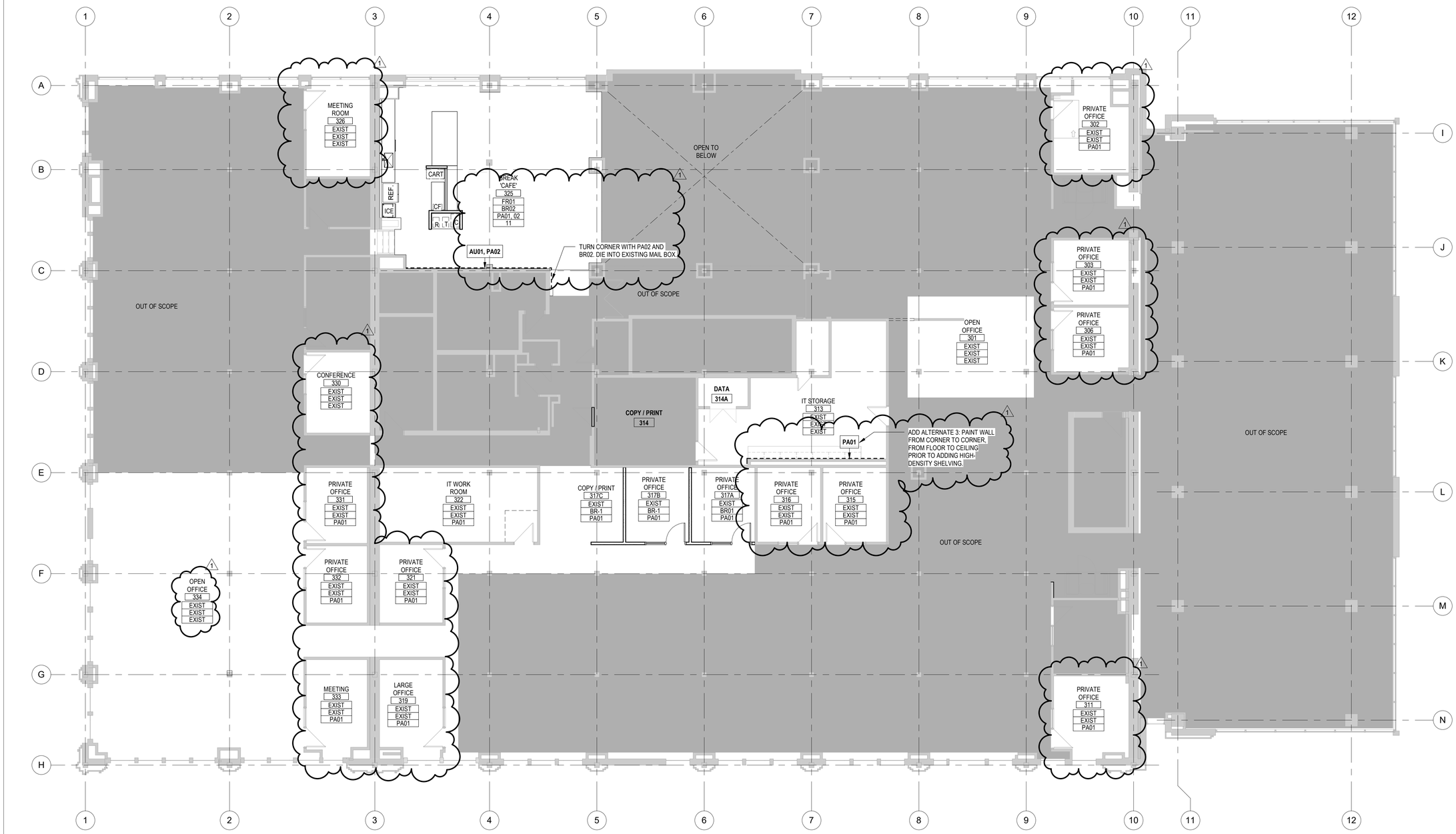


A01 LEVEL 03
RE: A01 / A400
1/8" = 1'-0"

MARC
Mid-America Regional Council

**MARC PHASE 1 OFFICE RENOVATION**

600 BROADWAY BLVD STE 200,
KANSAS CITY, MO 64105

odimo

MO CERT OF AUTH.: #2016000414
ODIMO PROJ. #: 211002


**OWNER**
ATTN: CAROL GONZALES,
DIRECTOR OF FINANCE AND ADMINISTRATION
600 BROADWAY, SUITE 200
KANSAS CITY, MO 64105
816.701.8204
CGONZALES@MARC.ORG

**ARCHITECT**
ATTN: AMY J. SLATTERY, AIA
ODIMO LLC
701 E 63RD STREET #210
KANSAS CITY, MO 64110
816.708.1500
ASLATTERY@ODIMO.US

**MEP ENGINEERING**
ATTN: BRAD LEWIS
BRANCHPATTERN, INC.
1508 GRAND BOULEVARD
KANSAS CITY, MO 64108
816.531.2121
BLEWIS@BRANCHPATTERN.COM


**ORIGINAL SHEET ISSUE DATE:** 05/31/2022

| △ | DATE | DESCRIPTION |
|---|---|---|
| 1 | 06/07/2022 | ADDENDUM 01 |

**ISSUE**
**BID / PERMIT SET**
05/31/2022

**SEAL / SIGNATURE**
STATE OF MISSOURI
AMY J. SLATTERY
NUMBER A-2007019930
ARCHITECT
06/07/2022
AMY SLATTERY - ARCHITECT - MO # 2007019930

**DESCRIPTION**
**FINISH PLAN - LEVEL 03**

# A653

©2022 Odimo

## FINISH LEGEND

**ROOM FINISH TAG**
ROOM NAME
ROOM #
FLOOR FINISH
BASE FINISH
PRIMARY WALL FINISH
INTERIOR FINISH MATERIALS INDEX
INTERIOR ROOM FINISH REMARKS. RE: GENERAL NOTES

EX00 — ACCENT WALL FINISH/COLOR DESIGNATED WITH DASHED LINES AND FINISH NOTE

## GENERAL NOTES

01 FLOOR FINISH PATTERN SHALL BE CENTERED IN ROOM U.N.O.
02 FLOOR FINISH MATERIAL TO BE INSTALLED UNDER TOE KICKS OF CASEWORK/MILLWORK, UNDER OPEN COUNTERTOPS & EQUIPMENT.
03 FLOORING MATERIAL / COLOR TRANSITIONS SHALL OCCUR AT DOOR STOP, U.N.O.
04 ALIGN ALL WALL & FLOOR TILE JOINTS U.N.O.
05 TRANSTION WALL BASE AT INSIDE CORNERS U.N.O.
06 INSTALL MECHANICALLY FASTENED TRANSITION STRIPS AT ALL FLOOR FINISH MATERIAL CHANGES.
07 REFER TO SHEET G001 FOR ADDITIONAL GENERAL NOTES THAT ARE APPLICABLE.
08 ALL CLOSETS & ALCOVES WITHOUT A SPACE IDENTIFICATION NUMBER SHALL HAVE THE SAME FLOOR FINISHES AS ADJOINING SPACES.
09 ON LEVEL 04: PAINT ALL WALLS IMPACTED BY SCOPE OF WORK PA01 UNLESS NOTED OTHERWISE.
10 ON LEVEL 02/03: PAINT ALL WALLS IMPACTED BY SCOPE OF WORK PA03 UNLESS NOTED OTHERWISE. MATCH EXISTING SHEEN.
11 WHERE MULTIPLE FINISHES ARE INDICATED, REFER TO ELEVATIONS FOR EXTENT OF MATERIALS.

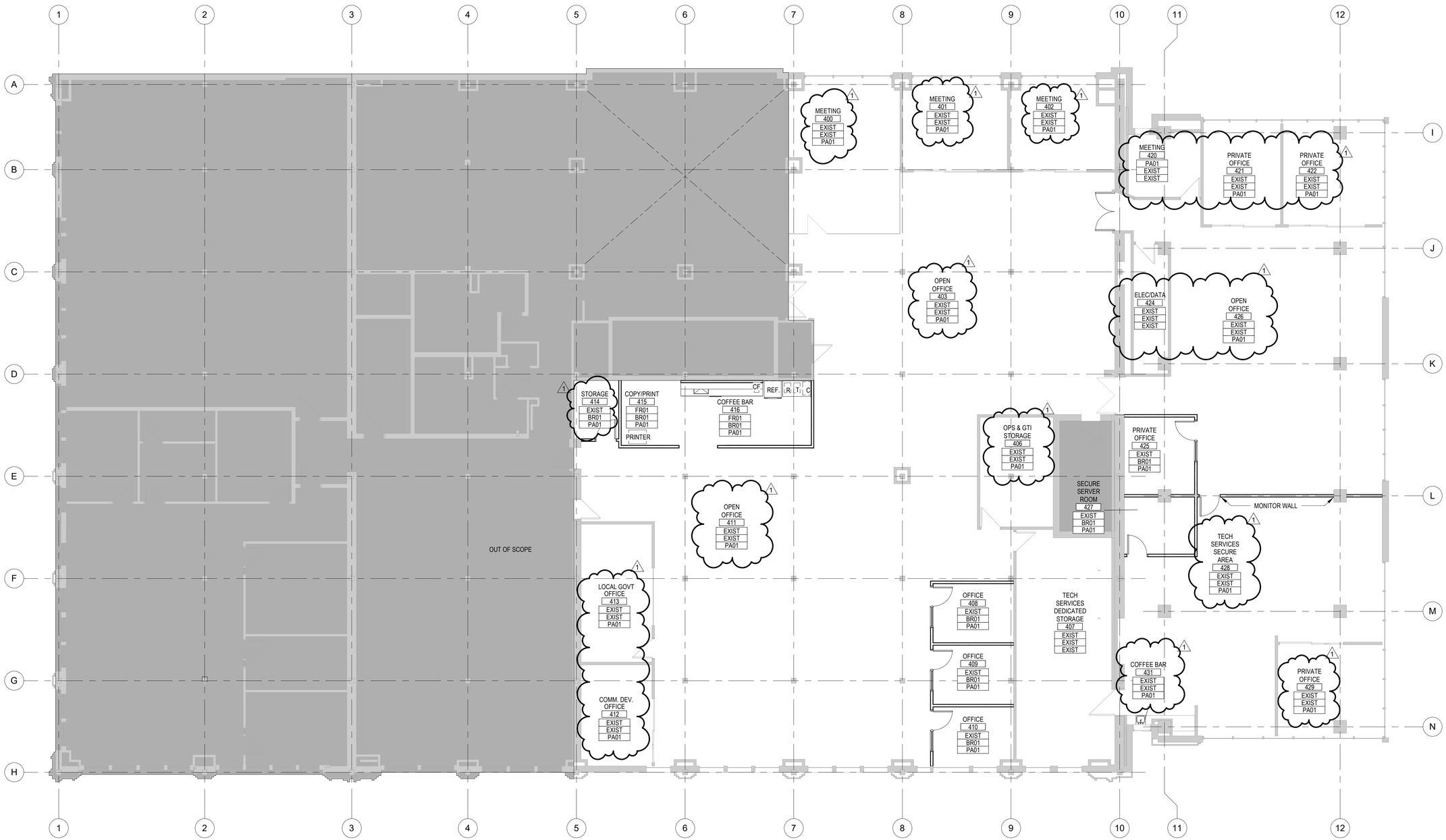


A01 FINISH PLAN - LEVEL 04
RE: I05 / A400 | 1/8" = 1'-0"

MARC
Mid-America Regional Council

# MARC PHASE 1 OFFICE RENOVATION

600 BROADWAY BLVD STE 200,
KANSAS CITY, MO 64105

odimo™

MO CERT OF AUTH.: #2016000414
ODIMO PROJ. #: 211002


**OWNER**
ATTN: CAROL GONZALES,
DIRECTOR OF FINANCE AND ADMINISTRATION
600 BROADWAY, SUITE 200
KANSAS CITY, MO 64105
816.701.8204
CGONZALES@MARC.ORG

**ARCHITECT**
ATTN: AMY J. SLATTERY, AIA
ODIMO LLC
701 E 63RD STREET #210
KANSAS CITY, MO 64110
816.708.1500
ASLATTERY@ODIMO.US

**MEP ENGINEERING**
ATTN: BRAD LEWIS
BRANCHPATTERN, INC.
1508 GRAND BOULEVARD
KANSAS CITY, MO 64108
816.531.2121
BLEWIS@BRANCHPATTERN.COM


**ORIGINAL SHEET ISSUE DATE:** 05/31/2022

| △ | DATE | DESCRIPTION |
|---|---|---|
| 1 | 06/07/2022 | ADDENDUM 01 |

**ISSUE**
**BID / PERMIT SET**
05/31/2022

**SEAL / SIGNATURE**
STATE OF MISSOURI
AMY J. SLATTERY
NUMBER A-2007019930
ARCHITECT
06/07/2022
AMY SLATTERY - ARCHITECT - MO # 2007019930

**DESCRIPTION**
**FINISH PLAN - LEVEL 04**

# A654

©2022 Odimo

## KEY NOTES (X) (THIS SHEET)

1. MAINTAIN EXISTING DUCTS AND AIRFLOW.
2. REBALANCE SYSTEM TO SUPPLY 175 CFM.
3. REBALANCE SYSTEM TO SUPPLY 75 CFM.
4. DUCT LOCATED OVER TOP OF EXISTING WALL TO BE EXTENDED TO DECK. RELOCATE DUCT OFF WALL TO SIDE OF WALL WHERE TAG INDICATES. MAINTAIN AIR DISTRIBUTION TO SPACES AFTER WALL EXTENSION.

## GENERAL NOTES (THIS SHEET)

1. REFER TO SHEET M001 FOR GENERAL NOTES AND PLUMBING LEGEND.
2. THE EXISTING CONDITIONS INDICATED ON THE DRAWINGS ARE TAKEN FROM THE BEST INFORMATION AVAILABLE AND FROM VISUAL SITE INSPECTION AND SHOULD NOT BE CONSIDERED "AS BUILT" CONDITIONS. THE INFORMATION SHOWN IS TO ESTABLISH THE EXTENT OF THE SCOPE OF WORK. VERIFY ALL ACTUAL EXISTING CONDITIONS AT THE PROJECT SITE AND PERFORM WORK AS REQUIRED TO MEET THE EXISTING CONDITIONS AND THE EXTENT OF WORK INDICATED.

BranchPattern | www.branchpattern.com PROJECT NUMBER: 1113004 BETTER BUILT ENVIRONMENTS

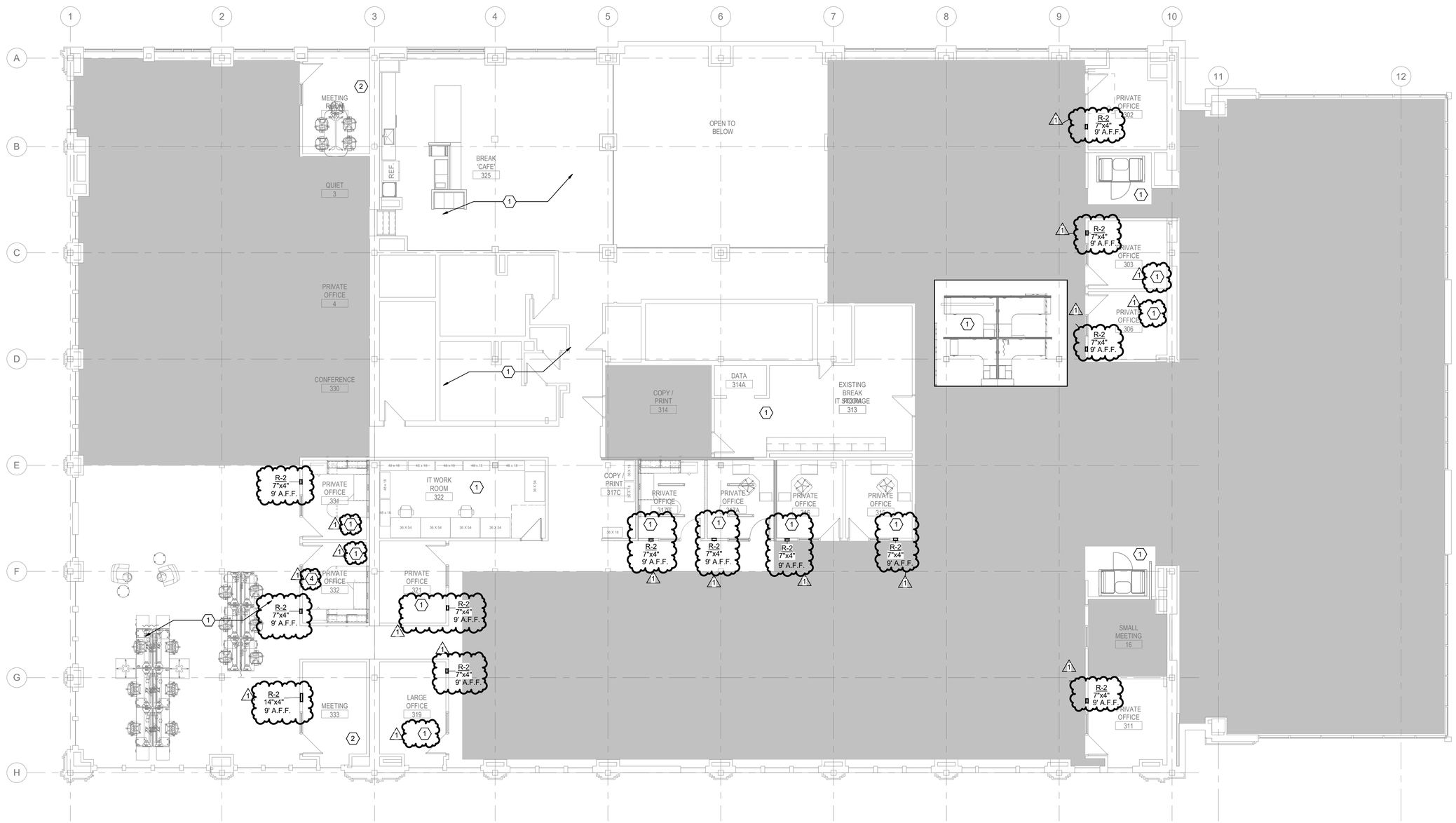


N

1 LEVEL - 03 - HVAC PLAN
SCALE: 1/8" = 1'-0"

0' 4' 8' 16'

MARC
Mid-America Regional Council

**MARC PHASE 1 OFFICE RENOVATION**

600 BROADWAY BLVD STE 200,
KANSAS CITY, MO 64105

odimo™

MO CERT OF AUTH.: #2016000414
ODIMO PROJ. #: 211002


**OWNER**
ATTN: CAROL GONZALES,
DIRECTOR OF FINANCE AND ADMINISTRATION
600 BROADWAY, SUITE 200
KANSAS CITY, MO 64105
816.701.8204
CGONZALES@MARC.ORG

**ARCHITECT**
ATTN: AMY J. SLATTERY, AIA
ODIMO LLC
701 E 63RD STREET #210
KANSAS CITY, MO 64110
816.708.1500
ASLATTERY@ODIMO.US

**MEP ENGINEERING**
ATTN: BRAD LEWIS
BRANCHPATTERN, INC.
1508 GRAND BOULEVARD
KANSAS CITY, MO 64108
816.531.2121
BLEWIS@BRANCHPATTERN.COM


**ORIGINAL SHEET ISSUE DATE:** 05/31/2022

| △ | DATE | DESCRIPTION |
|---|---|---|
| 1 | 06/07/2022 | ADDENDUM 01 |

**ISSUE**
**BID / PERMIT SET**
05/31/2022

**SEAL / SIGNATURE**

STATE OF MISSOURI
MARK STAINBROOK
NUMBER PE-2018021831
PROFESSIONAL ENGINEER
06/07/2022

**DESCRIPTION**
**LEVEL 03 - HVAC PLAN**

# M103

©2022 Odimo

## KEY NOTES (X) (THIS SHEET)

1. MAINTAIN EXISTING DUCTS AND AIRFLOW.
2. RELOCATE EXISTING CT-73 THERMOSTAT TO NEW LOCATION INDICATED.
3. RELOCATE EXISTING SUPPLY AND RETURN DIFFUSER AS NEEDED FOR NEW OFFICE.
4. RELOCATE SIDEWALL DIFFUSERS AS NECESSARY TO PROVIDE ONE DIFFUSER PER OFFICE. (1)
5. PROVIDE DOOR WITH VENTS FOR AIRFLOW.
6. REBALANCE SIDEWALL GRILL TO SUPPLY 275 CFM. (1)

## GENERAL NOTES (THIS SHEET)

1. REFER TO SHEET M001 FOR GENERAL NOTES AND PLUMBING LEGEND.
2. THE EXISTING CONDITIONS INDICATED ON THE DRAWINGS ARE TAKEN FROM THE BEST INFORMATION AVAILABLE AND FROM VISUAL SITE INSPECTION AND SHOULD NOT BE CONSIDERED "AS BUILT" CONDITIONS. THE INFORMATION SHOWN IS TO ESTABLISH THE EXTENT OF THE SCOPE OF WORK. VERIFY ALL ACTUAL EXISTING CONDITIONS AT THE PROJECT SITE AND PERFORM WORK AS REQUIRED TO MEET THE EXISTING CONDITIONS AND THE EXTENT OF WORK INDICATED.

BranchPattern
www.branchpattern.com
PROJECT NUMBER: 1113004
BETTER BUILT ENVIRONMENTS

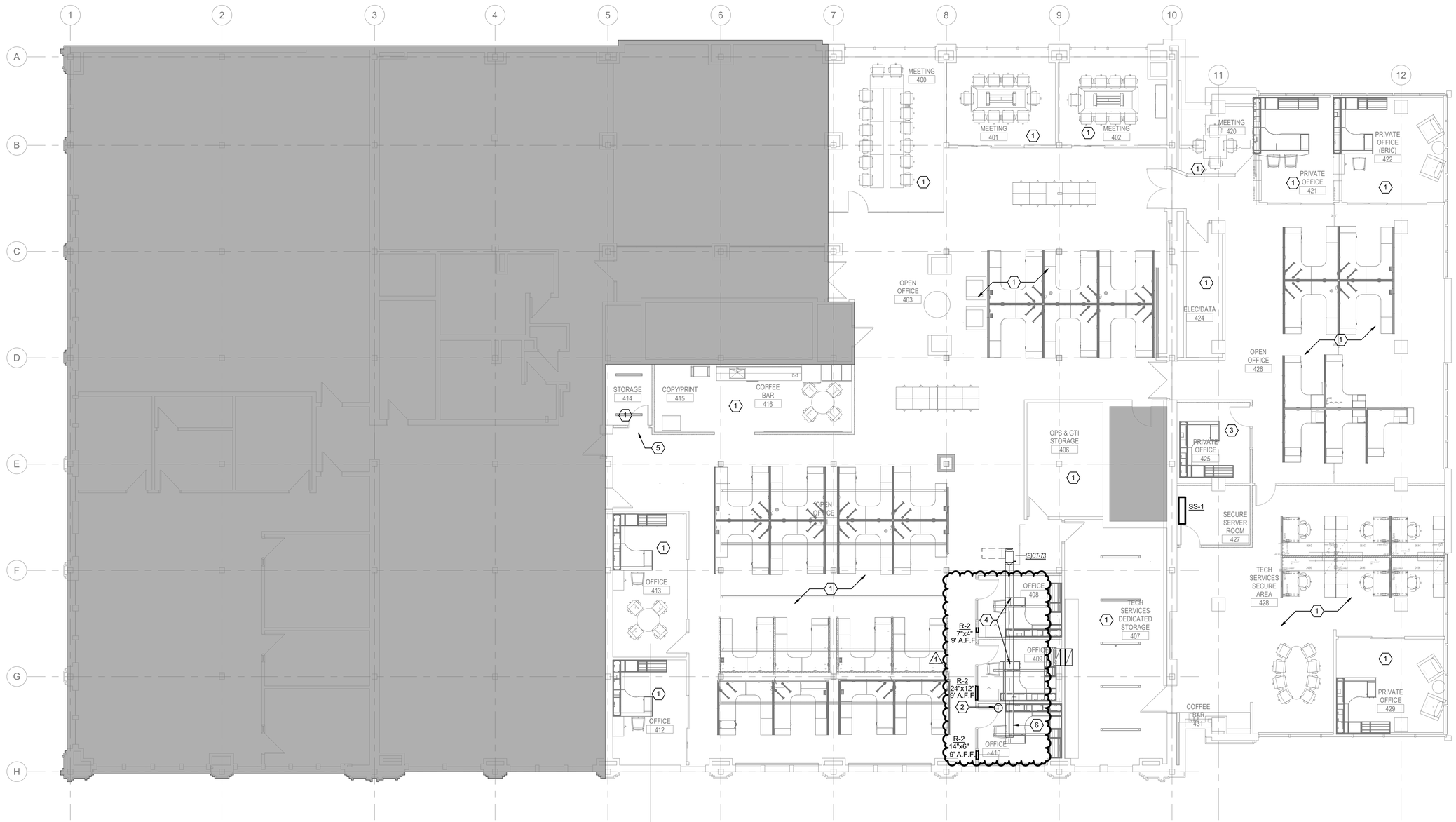


N

## 1 LEVEL - 04 - HVAC PLAN

SCALE: 1/8" = 1'-0"

0' 4' 8' 16'

MARC
Mid-America Regional Council

# MARC PHASE 1 OFFICE RENOVATION

600 BROADWAY BLVD STE 200,
KANSAS CITY, MO 64105

odimo™

MO CERT OF AUTH.: #2016000414
ODIMO PROJ. #: 211002


**OWNER**
ATTN: CAROL GONZALES,
DIRECTOR OF FINANCE AND ADMINISTRATION
600 BROADWAY, SUITE 200
KANSAS CITY, MO 64105
816.701.8204
CGONZALES@MARC.ORG

**ARCHITECT**
ATTN: AMY J. SLATTERY, AIA
ODIMO LLC
701 E 63RD STREET #210
KANSAS CITY, MO 64110
816.708.1500
ASLATTERY@ODIMO.US

**MEP ENGINEERING**
ATTN: BRAD LEWIS
BRANCHPATTERN, INC.
1508 GRAND BOULEVARD
KANSAS CITY, MO 64108
816.531.2121
BLEWIS@BRANCHPATTERN.COM


**ORIGINAL SHEET ISSUE DATE:** 05/31/2022

| △ | DATE | DESCRIPTION |
|---|---|---|
| 1 | 06/07/2022 | ADDENDUM 01 |

**ISSUE**

**BID / PERMIT SET**
05/31/2022

**SEAL / SIGNATURE**

STATE OF MISSOURI
MARK STAUBROOK
NUMBER PE-2018021831
PROFESSIONAL ENGINEER
06/07/2022

**DESCRIPTION**

**LEVEL 04 - HVAC PLAN**

# M104

©2022 Odimo

BranchPattern | www.branchpattern.com PROJECT NUMBER: 1113004 BETTER BUILT ENVIRONMENTS

# AIR OUTLET AND INLET SCHEDULE

| MARK | MANUFACTURER | MODEL | TYPE | MODULE SIZE | RUN-OUT DIA. (IN.) | NECK DIA. (IN.) | MAX CFM | MATERIAL | BORDER | MAX NC | MAX T.S.P. ("WC) | NOTES |
|---|---|---|---|---|---|---|---|---|---|---|---|---|
| D-1 D-1D | PRICE | ASPD | FULL FACE MODULE DIFFUSER DROPPED SQUARE PLAQUE | 24"x24" | 8 | 6 | 200 | STAINLESS STEEL | LAY-IN OR SURFACE (REF: RCP) | 25 | 0.1" | 1,2,3,4,5,7 |
| | | | | | 10 | 8 | 320 | | | | | |
| | | | | | 12 | 10 | 400 | | | | | |
| | | | | | 14 | 12 | 475 | | | | | |
| | | | | | 16 | 14 | 560 | | | | | |
| R-1 R-1D | PRICE | APDDR | PERFORATED MODULE RETURN | 24"x24" | 6x6 | 6x6 | 120 | STAINLESS STEEL | LAY-IN OR SURFACE (REF: RCP) | 25 | 0.1" | 1,2,4,5,7 |
| | | | | | 8x8 | 8x8 | 260 | | | | | |
| | | | | | 10x10 | 10x10 | 470 | | | | | |
| | | | | | 12x12 | 12x12 | 760 | | | | | |
| | | | | | 14x14 | 14x14 | 1140 | | | | | |
| | | | | | 16x16 | 16x16 | 1630 | | | | | |
| | | | | | 18x18 | 18x18 | 2220 | | | | | |
| R-2 | PRICE | 80 EGGCRATE | SIDEWALL RETURN GRILLE - 0° DEFLECTION | SEE PLANS | SEE PLANS | SEE PLANS | SEE PLANS | STAINLESS STEEL | DUCT / SURFACE | 25 | 0.1" | 1,4,5,6,7 |

NOTES:

1. DIFFUSER / GRILLE / REGISTER AND / OR ASSOCIATED PLENUM IS DUCTED.
2. FLUSH FACE PANEL.
3. 4-WAY AIR THROW PATTERN, UNLESS STATED OTHERWISE.
4. PROVIDE WITH REMOTE DAMPER REGULATOR IN AREAS WITH INACCESSIBLE CEILINGS / WALLS (REFERENCE "D" SUFFIX MARK).
5. CONTRACTOR TO COORDINATE AND CONFIRM BORDER AND MOUNTING TYPE WITH ARCHITECTURAL PLANS PRIOR TO ORDERING.
6. FRONT BLADES PARALLEL TO FLOOR / DUCTWORK.
7. COORDINATE FINISH WITH ARCHITECT.

6/6/2022

# DUCTLESS SPLIT SYSTEM SCHEDULE

| MARK | MANUFACTURER & MODEL | SERVES | LOCATION | FAN CFM MIN / MAX | COIL CAPACITY HEATING TOTAL (MBH) | COIL CAPACITY COOLING SENSIBLE / TOTAL (MBH) | SEER / EER | ELECTRICAL DATA FLA | MOPD | VOLTS/PH/HZ | NOTES |
|---|---|---|---|---|---|---|---|---|---|---|---|
| SS-1 | CARRIER 40MAQB24B--3 | ELEVATOR ROOM | SEE PLAN | 520 / 870 | 16.6 | 18 / 24 | 20.5 / 13 | .4 | -- | 208/1/60 | 1,2,3,4,5 |
| | | | | | | | | | | | |

NOTES

1. PROVIDE WALL MOUNTED THERMOSTAT.
2. PROVIDE REFRIGERANT PIPING TO CONDSENING UNIT PER MANUFACTURERS REQUIREMENTS.
3. UNIT POWER SUPPLIED FROM OUTDOOR UNIT.
4. PROVIDE MODEL SI-30 CONDENSATE PUMP WIRED FROM INDOOR UNIT PER PUMP MANUFATURER'S INSTRUCTIONS OR FACTORY INSTALLED PUMP.
5. RUN ALL PIPING CONCEALED.

# DUCTLESS SPLIT SYSTEM HEAT PUMP SCHEDULE

| MARK | MANUFACTURER & MODEL | SERVES | LOCATION | FULL LOAD CAP. (MBH) | OPERATING TEMPS HEATING (F) MIN / MAX | OPERATING TEMPS COOLING (F) MIN / MAX | HSPF | ELECTRICAL DATA FLA | MOPD | VOLTS/PH/HZ | NOTES: |
|---|---|---|---|---|---|---|---|---|---|---|---|
| SSC-1 | CARRIER 38MAQB24R--3 | SS-1 | SEE PLAN | 24.0 | -22 / 86 | -13 / 122 | 11.5 | 20.0 | 30 | 208/1/60 | 1,2,3,4 |
| | | | | | | | | | | | |

NOTES:

1. PROVIDE REFRIGERANT AND REFRIGERANT PIPING TO INDOOR UNIT PER MANUFACTURERS REQUIREMENT.
2. PROVIDE WITH WIND GUARD AND ALL ACCESSORIES FOR LOW AMBIENT OPERATION.
3. INSTALL OUTDOOR UNIT ON EQUIPMENT PAD WITH ELEVATED PREFAB EQUIPMENT STAND OR WALL BRACKET AS INDICATED ON DRAWINGS.
4. ACCEPTABLE MANUFACTURERS: CARRIER OR EQUAL.

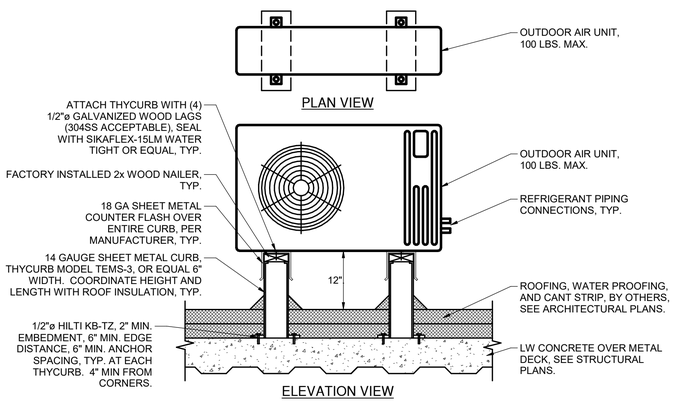


## D1 OUTDOOR SPLIT SYSTEM MOUNTING

SCALE: NONE

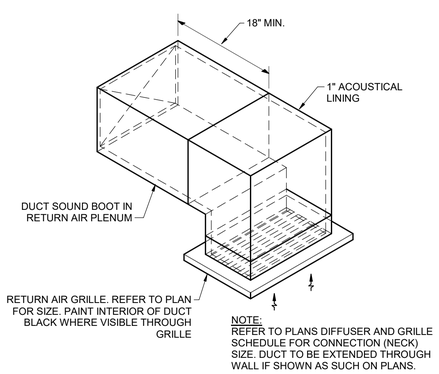


## A1 SOUND BOOT DETAIL

SCALE: NONE

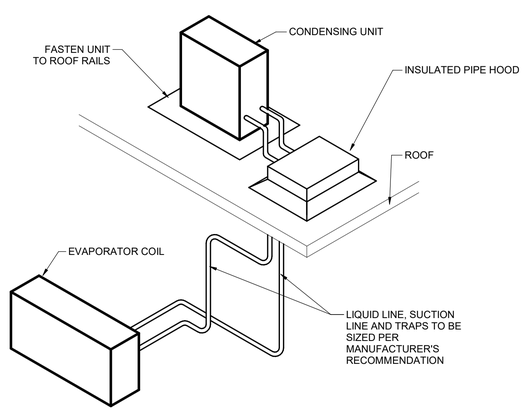


## A5 SPLIT SYSTEM - ROOF MOUNTED CONDENSER

SCALE: NONE

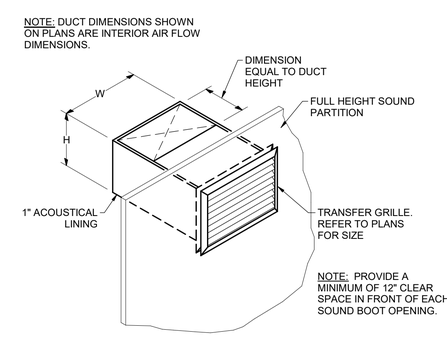


## A11 TRANSFER GRILLE/DUCT CONNECTION

SCALE: NONE

MARC
Mid-America Regional Council

**MARC PHASE 1 OFFICE RENOVATION**

600 BROADWAY BLVD STE 200, KANSAS CITY, MO 64105

odimo™

MO CERT OF AUTH.: #2016000414
ODIMO PROJ. #: 211002


**OWNER**
ATTN: CAROL GONZALES, DIRECTOR OF FINANCE AND ADMINISTRATION
600 BROADWAY, SUITE 200
KANSAS CITY, MO 64105
816.701.8204
CGONZALES@MARC.ORG

**ARCHITECT**
ATTN: AMY J. SLATTERY, AIA
ODIMO LLC
701 E 63RD STREET #210
KANSAS CITY, MO 64110
816.708.1500
ASLATTERY@ODIMO.US

**MEP ENGINEERING**
ATTN: BRAD LEWIS
BRANCHPATTERN, INC.
1508 GRAND BOULEVARD
KANSAS CITY, MO 64108
816.531.2121
BLEWIS@BRANCHPATTERN.COM


**ORIGINAL SHEET ISSUE DATE:** 05/31/2022

| △ | DATE | DESCRIPTION |
|---|---|---|
| 1 | 06/07/2022 | ADDENDUM 01 |

**ISSUE**

**BID / PERMIT SET**
05/31/2022

**SEAL / SIGNATURE**

STATE OF MISSOURI
MARK STAINBROOK
NUMBER PE-2018021831
PROFESSIONAL ENGINEER
06/07/2022

**DESCRIPTION**

**MECHANICAL DETAILS AND SCHEDULES**

**M201**

©2022 Odimo

## KEY NOTES (X) (THIS SHEET)

1. MAINTAIN EXISTING DUCTS AND AIRFLOW.

## FIRE PROTECTION GENERAL NOTES (THIS SHEET)

1. SPRINKLER CONTRACTOR TO ADJUST SPRINKLER HEADS IMPACTED BY WALLS EXTENDED TO DECK. IN AREAS OF LIGHT HAZARD OCCUPANCY, MAX SPACING OF 225 SQUARE FOOT PER SPRINKLER WITH VERIFICATION BY HYDRAULIC CALCULATIONS DESIGNED FOR A MINIMUM DISCHARGE DENSITY OF 0.10 GPM/SQUARE FOOT OVER THE MOST REMOTE 1,500 SQUARE FOOT OF AREA.

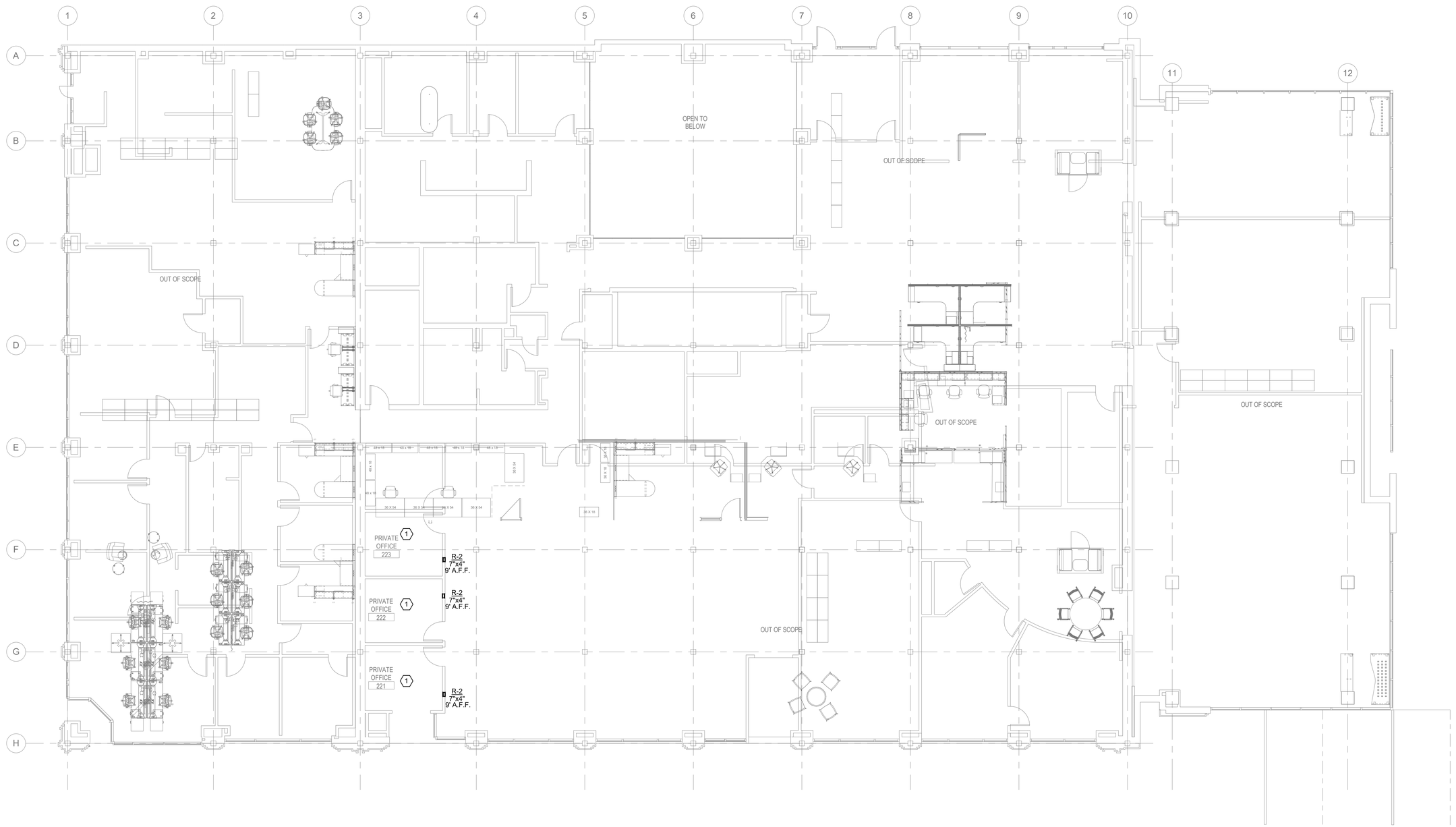


N

# 1 LEVEL - 02 - HVAC/PLUMBING PLAN

SCALE: 1/8" = 1'-0"

0' 4' 8' 16'

BranchPattern
www.branchpattern.com
PROJECT NUMBER: 1113004
BETTER BUILT ENVIRONMENTS

MARC
Mid-America Regional Council

**MARC PHASE 1 OFFICE RENOVATION**

600 BROADWAY BLVD STE 200,
KANSAS CITY, MO 64105

odimo™

MO CERT OF AUTH.: #2016000414
ODIMO PROJ. #: 211002


**OWNER**
ATTN: CAROL GONZALES,
DIRECTOR OF FINANCE AND ADMINISTRATION
600 BROADWAY, SUITE 200
KANSAS CITY, MO 64105
816.701.8204
CGONZALES@MARC.ORG

**ARCHITECT**
ATTN: AMY J. SLATTERY, AIA
ODIMO LLC
701 E 63RD STREET #210
KANSAS CITY, MO 64110
816.708.1500
ASLATTERY@ODIMO.US

**MEP ENGINEERING**
ATTN: BRAD LEWIS
BRANCHPATTERN, INC.
1508 GRAND BOULEVARD
KANSAS CITY, MO 64108
816.531.2121
BLEWIS@BRANCHPATTERN.COM


**ORIGINAL SHEET ISSUE DATE:** 05/31/2022

| △ | DATE | DESCRIPTION |
|---|---|---|
| 1 | 06/07/2022 | ADDENDUM 01 |

**ISSUE**

**BID / PERMIT SET**
05/31/2022

**SEAL / SIGNATURE**

STATE OF MISSOURI
MARK STAINBROOK
NUMBER PE-2018021831
PROFESSIONAL ENGINEER
06/07/2022

**DESCRIPTION**

**LEVEL 02 - HVAC/PLUMBING PLAN**

**MP102**

©2022 Odimo

BranchPattern | www.branchpattern.com PROJECT NUMBER: 1113004 BETTER BUILT ENVIRONMENTS

## KEY NOTES (X) (THIS SHEET)

1. CONNECT TO NEAREST EXISTING COLD AND HOT WATER LINES IN RESTROOM. CONNECT TO PIPE OF EQUAL OR GREATER SIZE. PROVIDE BRANCH SHUTOFF VALVES AT NEW CONNECTION INTO EXISTING MAINS.
2. ADD ALT 3# - DEMOLISH EXISTING PLUMBING FIXTURES. CAP COLD AND HOT WATER PIPES SERVING FIXTURE ABOVE CEILING AS CLOSE TO MAIN AS POSSIBLE. REMOVE SANITARY PIPE SERVING FIXTURE BACK TO MAIN AND CAP.
3. CONNECT WATER LINE TO DISHWASHER.
4. WATER LINE TO BE ROUTED UNDER FLOOR.

## FIRE PROTECTION GENERAL NOTES (THIS SHEET)

1. SPRINKLER CONTRACTOR TO ADJUST SPRINKLER HEADS IMPACTED BY WALLS EXTENDED TO DECK. IN AREAS OF LIGHT HAZARD OCCUPANCY, MAX SPACING OF 225 SQUARE FOOT PER SPRINKLER WITH VERIFICATION BY HYDRAULIC CALCULATIONS DESIGNED FOR A MINIMUM DISCHARGE DENSITY OF 0.10 GPM/SQUARE FOOT OVER THE MOST REMOTE 1,500 SQUARE FOOT OF AREA.

## GENERAL NOTES (THIS SHEET)

1. REFER TO SHEET P001 FOR GENERAL NOTES AND PLUMBING LEGEND.
2. VERIFY EXISTING CONDITIONS AND LOCATION FOR CONNECTION OF NEW PIPING TO THE EXISTING. REMOVE EXISTING CEILING AND PORTION OF WALL AS REQUIRED FOR NEW PIPING CONNECTIONS. RESTORE TO ORIGINAL CONDITIONS AFTER COMPLETION OF WORK.
3. CONSTRUCTION FOR UNDERSLAB WATER LINES MUST BE CONDUCTED DURING NIGHTS AND WEEKENDS WHEN BUSINESS IS NOT OPERATIONAL.

N 1 LEVEL - 03 - DOMESTIC WATER PLAN
SCALE: 1/8" = 1'-0"
0' 2' 4' 8'

MARC
Mid-America Regional Council

**MARC PHASE 1 OFFICE RENOVATION**

600 BROADWAY BLVD STE 200,
KANSAS CITY, MO 64105

odimo

MO CERT OF AUTH.: #2016000414
ODIMO PROJ. #: 211002


**OWNER**
ATTN: CAROL GONZALES,
DIRECTOR OF FINANCE AND ADMINISTRATION
600 BROADWAY, SUITE 200
KANSAS CITY, MO 64105
816.701.8204
CGONZALES@MARC.ORG

**ARCHITECT**
ATTN: AMY J. SLATTERY, AIA
ODIMO LLC
701 E 63RD STREET #210
KANSAS CITY, MO 64110
816.708.1500
ASLATTERY@ODIMO.US

**MEP ENGINEERING**
ATTN: BRAD LEWIS
BRANCHPATTERN, INC.
1508 GRAND BOULEVARD
KANSAS CITY, MO 64108
816.531.2121
BLEWIS@BRANCHPATTERN.COM


**ORIGINAL SHEET ISSUE DATE:** 05/31/2022

| △ DATE | DESCRIPTION |
|---|---|

**ISSUE**
**BID / PERMIT SET**
05/31/2022

**SEAL / SIGNATURE**
STATE OF MISSOURI
MARK STAUBROOK
NUMBER PE-2018021831
PROFESSIONAL ENGINEER
06/07/2022

**DESCRIPTION**
**LEVEL 03 - DOMESTIC WATER PLAN**

**P153**

©2022 Odimo

BranchPattern | www.branchpattern.com
PROJECT NUMBER: 1113004
BETTER BUILT ENVIRONMENTS

## KEY NOTES (X) (THIS SHEET)

1. EXISTING PLUMBING FIXTURE TO BE REMOVED. RE-ROUTE ASSOCIATED PLUMBING AS REQUIRED TO NEW PLUMBING FIXTURE. REMOVE LINES AND CAP IF ASSOCIATED PLUMBING IS NOT RE-USED.
2. INSTANTANEOUS WATER HEATER UNDER SINK IS EXISTING TO REMAIN.
3. RE-USE EXISTING PIPING WHERE POSSIBLE.
4. CONNECT WATER, DRAIN AND VENT LINES TO DISHWASHER. PROVIDE TAILPIECE WITH SINK. (TO BE COMPLETED IF IT IS NOT EXISTING)

## FIRE PROTECTION GENERAL NOTES (THIS SHEET)

1. SPRINKLER CONTRACTOR TO ADJUST SPRINKLER HEADS IMPACTED BY WALLS EXTENDED TO DECK. IN AREAS OF LIGHT HAZARD OCCUPANCY, MAX SPACING OF 225 SQUARE FOOT PER SPRINKLER WITH VERIFICATION BY HYDRAULIC CALCULATIONS DESIGNED FOR A MINIMUM DISCHARGE DENSITY OF 0.10 GPM/SQUARE FOOT OVER THE MOST REMOTE 1,500 SQUARE FOOT OF AREA.

## GENERAL NOTES (THIS SHEET)

1. REFER TO SHEET P001 FOR GENERAL NOTES AND PLUMBING LEGEND.
2. VERIFY EXISTING CONDITIONS AND LOCATION FOR CONNECTION OF NEW PIPING TO THE EXISTING. REMOVE EXISTING CEILING AND PORTION OF WALL AS REQUIRED FOR NEW PIPING CONNECTIONS. RESTORE TO ORIGINAL CONDITIONS AFTER COMPLETION OF WORK.
3. CONSTRUCTION FOR UNDERSLAB WATER LINES MUST BE CONDUCTED DURING NIGHTS AND WEEKENDS WHEN BUSINESS IS NOT OPERATIONAL.

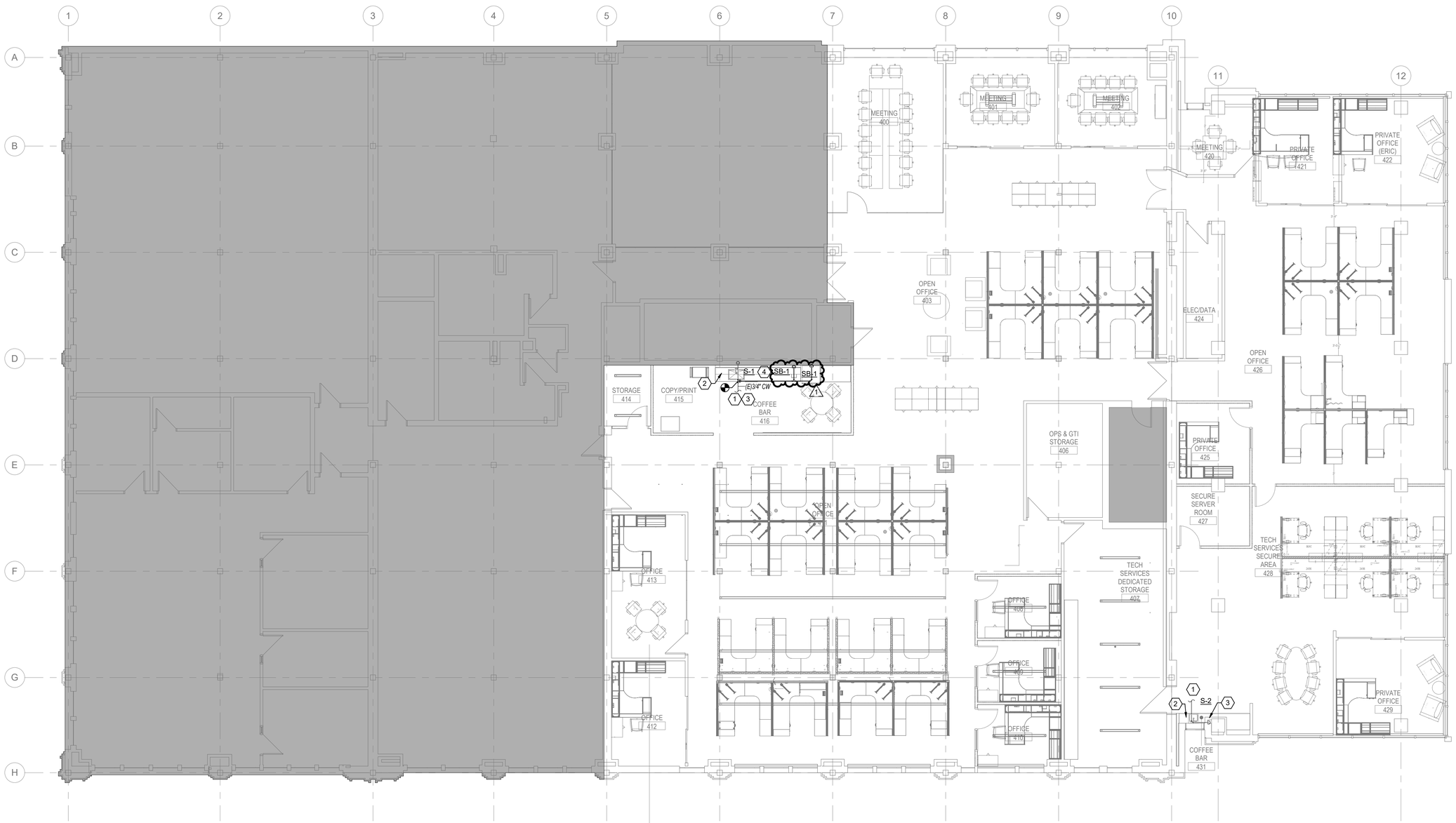


## 1 LEVEL - 04 - DOMESTIC WATER PLAN

SCALE: 1/8" = 1'-0"

0' 2' 4' 8'

MARC
Mid-America Regional Council

**MARC PHASE 1 OFFICE RENOVATION**

600 BROADWAY BLVD STE 200,
KANSAS CITY, MO 64105

odimo™

MO CERT OF AUTH.: #2016000414
ODIMO PROJ. #: 211002


**OWNER**
ATTN: CAROL GONZALES,
DIRECTOR OF FINANCE AND ADMINISTRATION
600 BROADWAY, SUITE 200
KANSAS CITY, MO 64105
816.701.8204
CGONZALES@MARC.ORG

**ARCHITECT**
ATTN: AMY J. SLATTERY, AIA
ODIMO LLC
701 E 63RD STREET #210
KANSAS CITY, MO 64110
816.708.1500
ASLATTERY@ODIMO.US

**MEP ENGINEERING**
ATTN: BRAD LEWIS
BRANCHPATTERN, INC.
1508 GRAND BOULEVARD
KANSAS CITY, MO 64108
816.531.2121
BLEWIS@BRANCHPATTERN.COM


**ORIGINAL SHEET ISSUE DATE:** 05/31/2022

| △ | DATE | DESCRIPTION |
|---|---|---|
| 1 | 06/07/2022 | ADDENDUM 01 |

**ISSUE**

**BID / PERMIT SET**
05/31/2022

**SEAL / SIGNATURE**

STATE OF MISSOURI
MARK STAUBROOK
NUMBER
PE-2018021831
PROFESSIONAL ENGINEER
06/07/2022

**DESCRIPTION**

**LEVEL 04 - DOMESTIC WATER PLAN**

**P154**

©2022 Odimo

BranchPattern | www.branchpattern.com
PROJECT NUMBER: 1113004
BETTER BUILT ENVIRONMENTS

## KEY NOTES (X)

(THIS SHEET)

1. DEVICES IN THIS AREA ARE EXISTING TO REMAIN U.N.O.
2. CONNECT TO EXISTING AREA DEVICE CIRCUIT.
3. PROVIDE NEW POWER POLE AND UTILIZE EXISTING RELOCATED FURNITURE WHIP. REFER TO ED104 FOR ADDITIONAL INFORMATION.
4. RECEPTACLES ARE INCLUDED WITH FURNITURE SYSTEM. DEVICES ARE SHOWN FOR CIRCUITRY REFERENCE ONLY.
5. PROVIDE JUNCTION BOX WITH POWER WHIP FOR FURNITURE SYSTEM.
6. RELOCATED FURNITURE WHIP. REFER TO ED104 FOR ADDITIONAL INFORMATION.
7. RELOCATED DEVICE. REFER TO ED104 FOR ADDITIONAL INFORMATION.
8. REUSE EXISTING DUPLEX RECEPTACLE FOR TOUCH-LESS FAUCET.
9. CARRY ALLOWANCE FOR 3 CIRCUITS FROM PANEL TO BE RELOCATED TO CREATE SPACE FOR NEW 100A/3P BREAKER FOR NEW SUB-PANEL. THE 3 CIRCUITS SHALL BE RELOCATED TO NEW SUB-PANEL. UTILIZE (3)#1, (1)#8G IN 1-1/4"C.
10. PROVIDE NEMA 3R 30A DISCONNECT. UTILIZE (2)#10, (1)#10G IN 1/2"C. COORDINATE EXACT LOCATION OF SSC-1.

## GENERAL NOTES

(THIS SHEET)

1. REFER TO SHEET E001 FOR SYMBOLS LEGEND AND ADDITIONAL GENERAL NOTES.

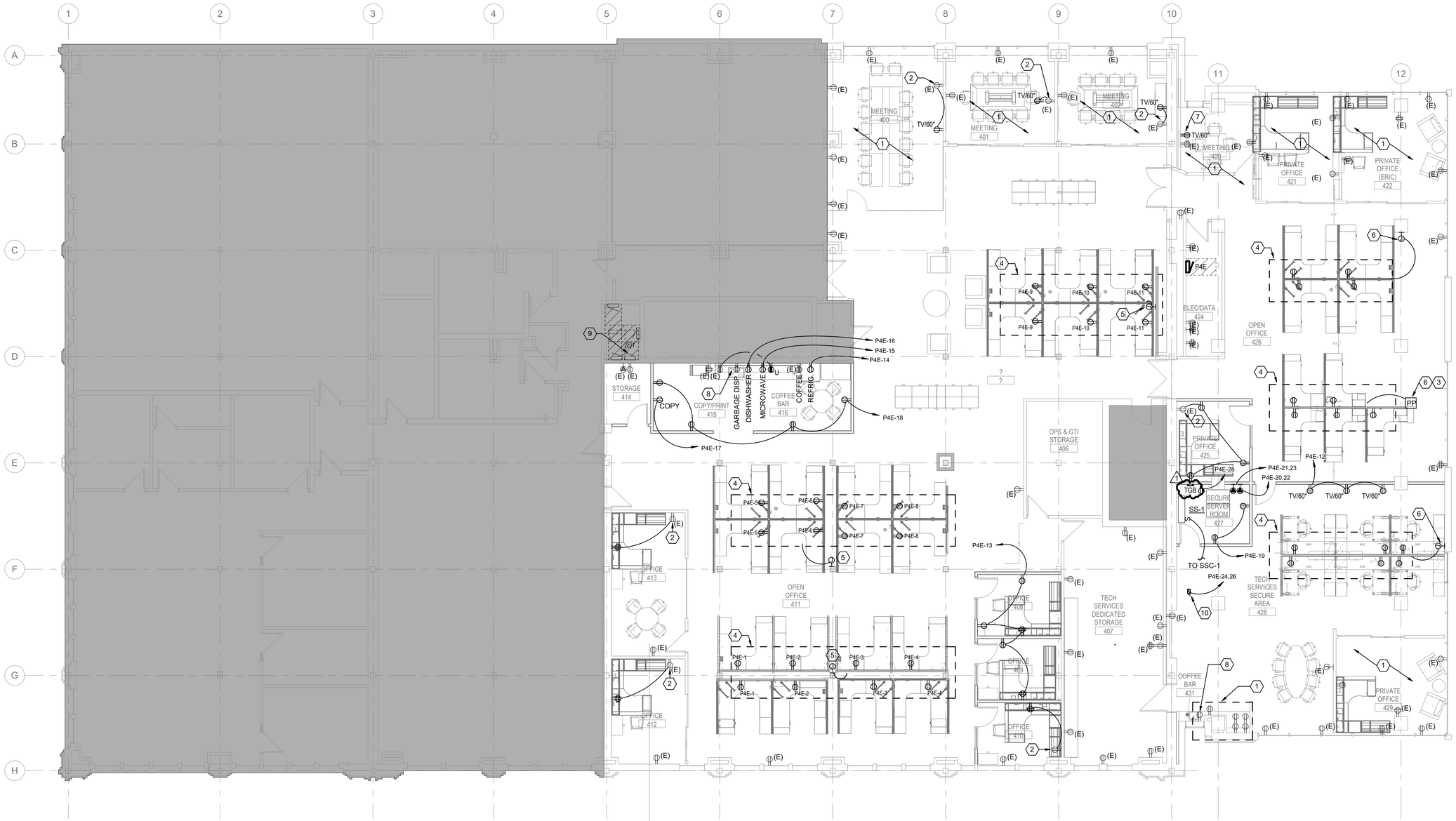


1 LEVEL - 04 - POWER PLAN
SCALE: 1/8" = 1'-0"

0' 2' 4' 8'

MARC
Mid-America Regional Council

# MARC PHASE 1 OFFICE RENOVATION

600 BROADWAY BLVD STE 200,
KANSAS CITY, MO 64105

odimo™

MO CERT OF AUTH.: #2016000414
ODIMO PROJ. #: 211002


**OWNER**
ATTN: CAROL GONZALES,
DIRECTOR OF FINANCE AND ADMINISTRATION
600 BROADWAY, SUITE 200
KANSAS CITY, MO 64105
816.701.8204
CGONZALES@MARC.ORG

**ARCHITECT**
ATTN: AMY J. SLATTERY, AIA
ODIMO LLC
701 E 63RD STREET #210
KANSAS CITY, MO 64110
816.708.1500
ASLATTERY@ODIMO.US

**MEP ENGINEERING**
ATTN: BRAD LEWIS
BRANCHPATTERN, INC.
1508 GRAND BOULEVARD
KANSAS CITY, MO 64108
816.531.2121
BLEWIS@BRANCHPATTERN.COM


**ORIGINAL SHEET ISSUE DATE:** 05/31/2022

| △ | DATE | DESCRIPTION |
|---|---|---|
| 1 | 06/07/2022 | ADDENDUM 01 |

**ISSUE**

**BID / PERMIT SET**
05/31/2022

**SEAL / SIGNATURE**

STATE OF MISSOURI
ABHINAV PANDEY
NUMBER PE-2018015824
PROFESSIONAL ENGINEER
06/07/2022

**DESCRIPTION**

**LEVEL 04 - POWER PLAN**

# E104

©2022 Odimo

BranchPattern | www.branchpattern.com
PROJECT NUMBER: 1113004
BETTER BUILT ENVIRONMENTS

## KEY NOTES (X) (THIS SHEET)

1. LIGHT FIXTURES AND CONTROLS IN THIS AREA ARE EXISTING TO REMAIN U.N.O.
2. CONNECT TO EXISTING AREA LIGHT FIXTURE CIRCUIT. PROVIDE NEW CONTROLS.
3. PROVIDE DRIVER IN CONCEAL BUT ACCESSIBLE LOCATION.
4. PROVIDE DIMMER SWITCH AND RELATED CIRCUITRY THAT IS COMPATIBLE WITH LIGHT FIXTURES TO BE CONTROLLED.

## GENERAL NOTES (THIS SHEET)

1. REFER TO SHEET E001 FOR SYMBOLS LEGEND AND ADDITIONAL GENERAL NOTES.

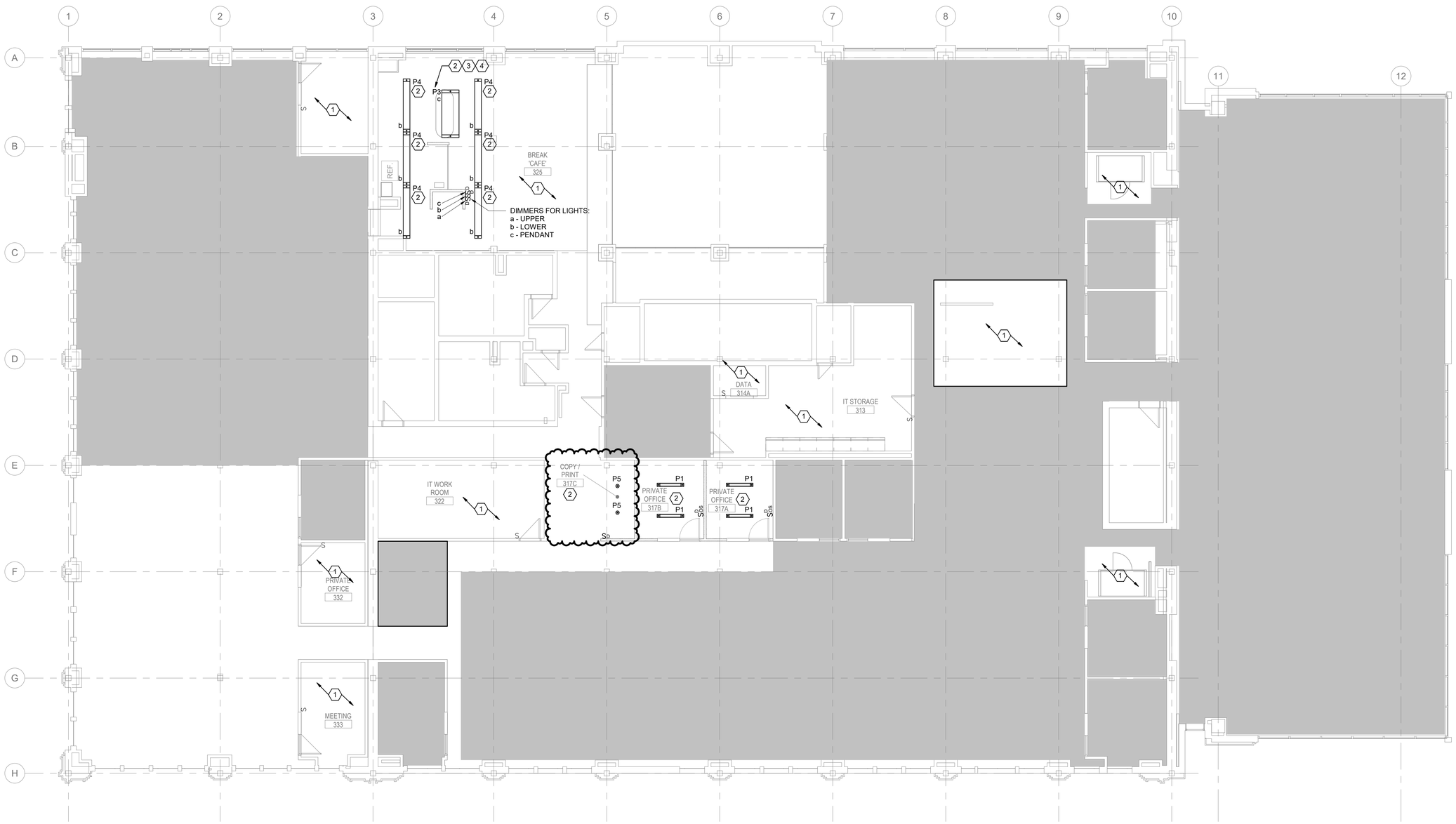


1 LEVEL - 03 - LIGHTING PLAN
SCALE: 1/8" = 1'-0"

0' 2' 4' 8'

MARC
Mid-America Regional Council

# MARC PHASE 1 OFFICE RENOVATION

600 BROADWAY BLVD STE 200,
KANSAS CITY, MO 64105

odimo™

MO CERT OF AUTH.: #2016000414
ODIMO PROJ. #: 211002


**OWNER**
ATTN: CAROL GONZALES,
DIRECTOR OF FINANCE AND ADMINISTRATION
600 BROADWAY, SUITE 200
KANSAS CITY, MO 64105
816.701.8204
CGONZALES@MARC.ORG

**ARCHITECT**
ATTN: AMY J. SLATTERY, AIA
ODIMO LLC
701 E 63RD STREET #210
KANSAS CITY, MO 64110
816.708.1500
ASLATTERY@ODIMO.US

**MEP ENGINEERING**
ATTN: BRAD LEWIS
BRANCHPATTERN, INC.
1508 GRAND BOULEVARD
KANSAS CITY, MO 64108
816.531.2121
BLEWIS@BRANCHPATTERN.COM


**ORIGINAL SHEET ISSUE DATE:** 05/31/2022

| △ | DATE | DESCRIPTION |
|---|---|---|
| 1 | 06/07/2022 | ADDENDUM 01 |

**ISSUE**
**BID / PERMIT SET**
05/31/2022

**SEAL / SIGNATURE**

STATE OF MISSOURI
ABHINAV PANDEY
NUMBER PE-2018015824
PROFESSIONAL ENGINEER
06/07/2022

**DESCRIPTION**
**LEVEL 03 - LIGHTING PLAN**

# E153

©2022 Odimo

BranchPattern | www.branchpattern.com
PROJECT NUMBER: 1113004
BETTER BUILT ENVIRONMENTS

## KEY NOTES (X)

(THIS SHEET)

1. LIGHT FIXTURES AND CONTROLS IN THIS AREA ARE EXISTING TO REMAIN U.N.O.
2. RELOCATE EXISTING LIGHTS TO LOCATION SHOWN. PROVIDE NEW CONTROLS FOR FIXTURES IN THIS AREA.
3. LIGHT FIXTURES ARE EXISTING TO REMAIN. SHORTEN LIGHTING RUN, REMOVE SECTION AND MOVE END CAP AS REQUIRED.
4. CONNECT TO EXISTING AREA LIGHT FIXTURE CIRCUIT AND CONTROLS.
5. CONNECT TO EXISTING AREA LIGHT FIXTURE CIRCUIT. PROVIDE NEW CONTROLS.
6. RETROFIT EXISTING TO REMAIN LIGHTING WITH NEW LED TYPE BULBS. CIRCUIT AND CONTROLS SHALL BE EXISTING TO REMAIN.

## GENERAL NOTES

(THIS SHEET)

1. REFER TO SHEET E001 FOR SYMBOLS LEGEND AND ADDITIONAL GENERAL NOTES.

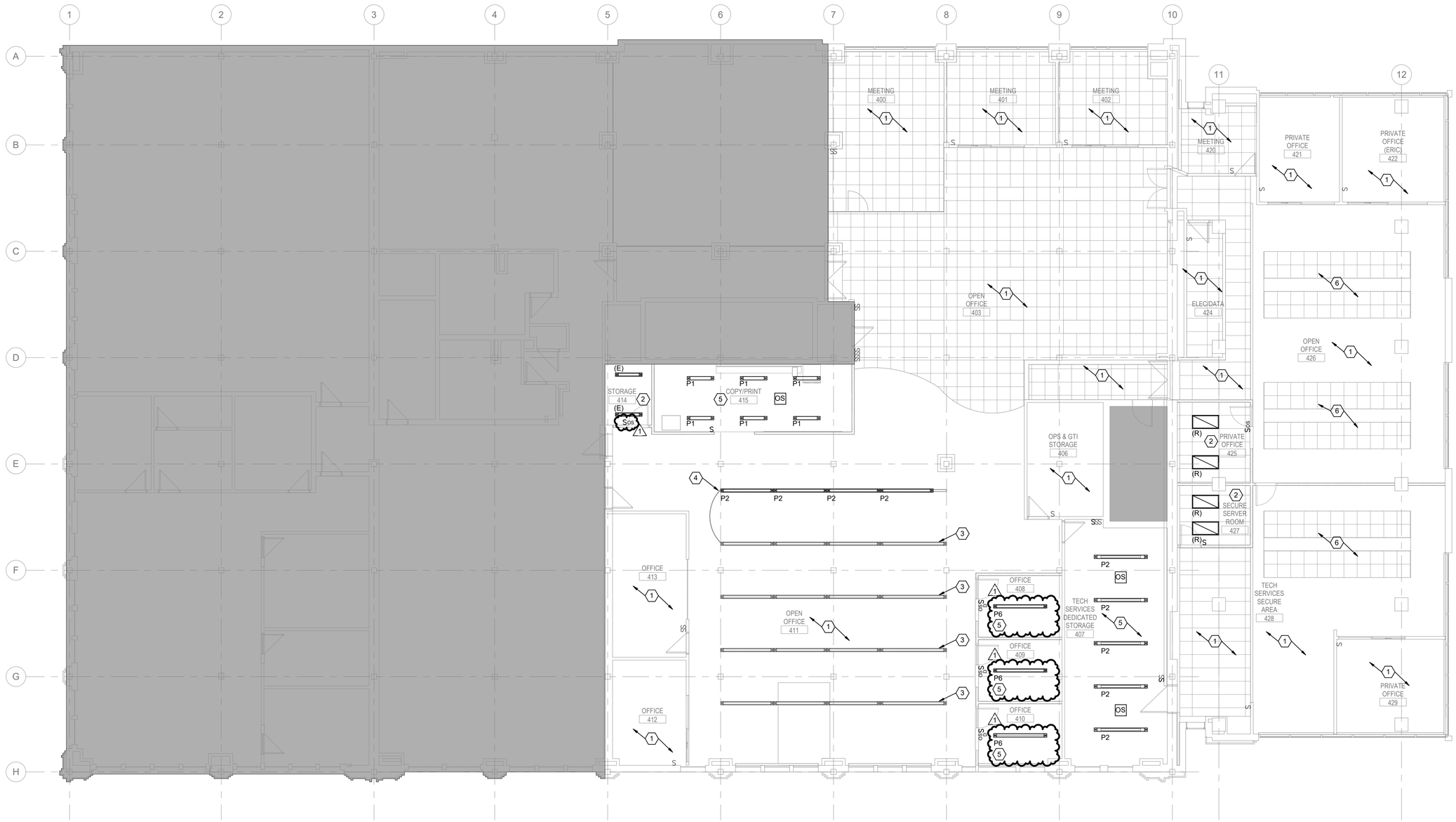


N

## 1 LEVEL - 04 - LIGHTING PLAN

SCALE: 1/8" = 1'-0"

0' 2' 4' 8'

MARC
Mid-America Regional Council

# MARC PHASE 1 OFFICE RENOVATION

600 BROADWAY BLVD STE 200,
KANSAS CITY, MO 64105

odimo™

MO CERT OF AUTH.: #2016000414
ODIMO PROJ. #: 211002


**OWNER**
ATTN: CAROL GONZALES,
DIRECTOR OF FINANCE AND ADMINISTRATION
600 BROADWAY, SUITE 200
KANSAS CITY, MO 64105
816.701.8204
CGONZALES@MARC.ORG

**ARCHITECT**
ATTN: AMY J. SLATTERY, AIA
ODIMO LLC
701 E 63RD STREET #210
KANSAS CITY, MO 64110
816.708.1500
ASLATTERY@ODIMO.US

**MEP ENGINEERING**
ATTN: BRAD LEWIS
BRANCHPATTERN, INC.
1508 GRAND BOULEVARD
KANSAS CITY, MO 64108
816.531.2121
BLEWIS@BRANCHPATTERN.COM


**ORIGINAL SHEET ISSUE DATE:** 05/31/2022

| △ | DATE | DESCRIPTION |
|---|---|---|
| 1 | 06/07/2022 | ADDENDUM 01 |

**ISSUE**
BID / PERMIT SET
05/31/2022

**SEAL / SIGNATURE**

STATE OF MISSOURI
ABHINAV PANDEY
NUMBER PE-2018015824
PROFESSIONAL ENGINEER
06/07/2022

**DESCRIPTION**
LEVEL 04 - LIGHTING PLAN

# E154

©2022 Odimo

BranchPattern | www.branchpattern.com
PROJECT NUMBER: 1113004
BETTER BUILT ENVIRONMENTS

# LUMINAIRE SCHEDULE - INTERIOR

| TAG | DESCRIPTION | MANUFACTURER OR APPROVED EQUIVALENT | CATALOG NUMBER OR APPROVED EQUIVALENT | SOURCE INFO TYPE | LUMENS | COLOR | CRI | INPUT VA | VOLTAGE | REMARKS |
|---|---|---|---|---|---|---|---|---|---|---|
| P1 | 4'-0" DIRECT/INDIRECT LINEAR SUSPENDED LED. | LITHONIA, WILLIAMS, COLUMBIA | GRD-LLP-4-80CRI-35K-ID1300LMF-20/80-MIN1-ZT-277-SCT-72A-C110 | LED | 5200 lm | 3500K | 80 | 40 VA | 277 V | |
| P2 | 8'-0" DIRECT/INDIRECT LINEAR SUSPENDED LED. | LITHONIA, WILLIAMS, COLUMBIA | GRD-LLP-8-80CRI-35K-ID1300LMF-20/80-MIN1-ZT-277-SCT-72A-C110 | LED | 7800 lm | 3500K | 80 | 80 VA | 277 V | |
| P3 | 2200MM X 800MM ACOUSTIC PENDANT LED. COORDINATE EXACT COLOR WITH ARCHITECT. PROVIDE 277V DRIVER. | PROLICHT | UMBRA | LED | 4150 lm | 4000K | 90 | 29 VA | 277 V | |
| ~~P4~~ | ~~8'-0" DIRECT/INDIRECT LINEAR SUSPENDED LED WITH INDEPENDENT UP/DOWN CONTROLS.~~ | ~~FLUXWERX~~ | ~~LS3-S-B-D-35-S-08-S-F2-M-06~~ | ~~LED~~ | ~~6700 lm~~ | ~~3500K~~ | ~~80~~ | ~~76 VA~~ | ~~277 V~~ | |
| P5 | 6" CYLINDER LED PENDANT | LITHONIA, WILLIAMS, COLUMBIA | LDN6CYL-35.20-L06-AR-LSS-MVOLT-GZ10-ACC-DDB | LED | 2000 lm | 3500K | 80 | 22 VA | 277 V | |
| P6 | 8'-0" LINEAR SUSPENDED LED. | LITHONIA, WILLIAMS, COLUMBIA | LL8-8000LM-80CRI-EPD-MIN10-EZT-MVOLT-CNP5CD10FT-DNA | LED | 8000 lm | 3500K | 80 | 66 VA | 277 V | |

1 (revision)

NOTES:

a. SEE SPECIFICATIONS FOR ADDITIONAL REQUIREMENTS FOR LUMINAIRES.
b. CONTRACTOR TO VERIFY LUMINAIRE CATALOG NUMBER AND INSTALLATION REQUIREMENTS PRIOR TO ORDERING.
c. LISTED ALTERNATE MANUFACTURERS ARE PERMITTED TO BID AN EQUIVALENT LUMINAIRE WHICH COMPLIES WITH THE PRODUCT REQUIREMENTS IDENTIFIED IN THIS SCHEDULE AND THE SPECIFICATIONS WITHOUT SUBMITTING A PRIOR APPROVAL REQUEST. ALTERNATE LUMINAIRES WILL BE REVIEWED DURING THE SUBMITTAL PROCESS AND THE MANUFACTURER WILL BE RESPONSIBLE TO PROVIDE A LUMINAIRE WHICH MEETS THE PRODUCT REQUIREMENTS. WHERE AN ALTERNATE MANUFACTURER IS NOT LISTED, A PRIOR APPROVAL REQUEST MUST BE SUBMITTED IN ACCORDANCE WITH THE SPECIFICATIONS IN ORDER TO BID THAT MANUFACTURER'S PRODUCT.
d. PROVIDE VIBRATION DAMPER IN POLE FIXTURES GREATER THAN 10'.
e. GALVANIZE THE INTERIOR AND EXTERIOR OF POLES. PRIME AND PAINT EXTERIOR WITH A MINIMUM OF 3 MILS OF TGIC POWDERS.
f. REMOVE PLASTIC WRAP FROM POLES ONCE RECEIVED ON SITE. STORE POLES OUT OF STANDING WATER OR VEGETATION.

## Branch Panel: P4E

**Location:** ELEC/DATA 424
**Supply From:** 1
**Mounting:** Surface
**Enclosure:** Type 1
**Phase Created:** New Construction
**Volts:** 208Y/120V
**Phases:** 3
**Wires:** 4
**K.A.I.C. Rating:** 10
**Mains Type:** MLO
**Mains / Design Rating:** 100 A
**Bus Rating:** 100 A

| Notes | CKT NO. | Circuit Description | Load Classification | Trip | Poles | A | | B | | C | | Poles | Trip | Load Classification | Circuit Description | CKT NO. | Notes |
|---|---|---|---|---|---|---|---|---|---|---|---|---|---|---|---|---|---|
| | 1 | REC: FURN 1 411 | R | 20 A | 1 | 1,000 | 1,000 | | | | | 1 | 20 A | R | REC: FURN 2 411 | 2 | |
| | 3 | REC: FURN 3 411 | R | 20 A | 1 | | | 1,000 | 1,000 | | | 1 | 20 A | R | REC: FURN 4 411 | 4 | |
| | 5 | REC: FURN 5 411 | R | 20 A | 1 | | | | | 1,000 | 1,000 | 1 | 20 A | R | REC: FURN 6 411 | 6 | |
| | 7 | REC: FURN 7 411 | R | 20 A | 1 | 1,000 | 1,000 | | | | | 1 | 20 A | R | REC: FURN 8 411 | 8 | |
| | 9 | REC: FURN 1 403 | R | 20 A | 1 | | | 1,000 | 1,000 | | | 1 | 20 A | R | REC: FURN 2 403 | 10 | |
| | 11 | REC: FURN 3 403 | R | 20 A | 1 | | | | | 1,000 | 750 | 1 | 20 A | R | REC: TV 428 | 12 | |
| | 13 | REC: OFFICE 408,409 | R | 20 A | 1 | 900 | 480 | | | | | 1 | 20 A | R | REC: REFRIG. 416 | 14 | G |
| G | 15 | REC: MICROWAVE 416 | R | 20 A | 1 | | | 1,000 | 1,000 | | | 1 | 20 A | R | REC: DISHWASHER 416 | 16 | G |
| | 17 | REC: COPIER 415 | R | 20 A | 1 | | | | | 900 | 720 | 1 | 20 A | R | REC: 415, 416 | 18 | |
| | 19 | REC: 427 | R | 20 A | 1 | 360 | 1,000 | | | | | 2 | 30 A | R | REC: IT RACK 2 427 | 20 | |
| | 21 | REC: IT RACK 1 427 | R | 30 A | 2 | | | 1,000 | 1,000 | | | | | | | 22 | |
| | 23 | | | | | | | | | 1,000 | 2,080 | 2 | 30 A | E | SSC-1 | 24 | |
| | 25 | SPACE | -- | -- | 1 | -- | 2,080 | | | | | | | | | 26 | |
| | 27 | SPACE | -- | -- | 1 | | | -- | 1,000 | | | 1 | 20 A | R | REC: IT RACK 427 | 28 | |
| | 29 | SPACE | -- | -- | 1 | | | | | -- | -- | 1 | -- | -- | SPACE | 30 | |
| | 31 | SPACE | -- | -- | 1 | -- | -- | | | | | 1 | -- | -- | SPACE | 32 | |
| | 33 | SPACE | -- | -- | 1 | | | -- | -- | | | 1 | -- | -- | SPACE | 34 | |
| | 35 | SPACE | -- | -- | 1 | | | | | -- | -- | 1 | -- | -- | SPACE | 36 | |
| | 37 | SPACE | -- | -- | 1 | -- | -- | | | | | 1 | -- | -- | SPACE | 38 | |
| | 39 | SPACE | -- | -- | 1 | | | -- | -- | | | 1 | -- | -- | SPACE | 40 | |
| | 41 | SPACE | -- | -- | 1 | | | | | -- | -- | 1 | -- | -- | SPACE | 42 | |
| | | | | | **Total Load:** | 8,820 VA | | 9,000 VA | | 8,450 VA | | | | | | | |
| | | | | | **Total Amps:** | 74 A | | 75 A | | 70 A | | | | | | | |

| Load Classification | | | Connected Load | Demand Factor | NEC Demand Load |
|---|---|---|---|---|---|
| L | Lighting | | 0 VA | 0.00% | 0 VA |
| C | Continuous | | 0 VA | 0.00% | 0 VA |
| R | Total Receptacle Load | 1st 10,000 VA | 10,000 VA | 100% | 10,000 VA |
| | 22,110 VA | Remaining | 12,110 VA | 50% | 6,055 VA |
| M | Total Motor Load | Largest Motor | 0 VA | 0.00% | 0 VA |
| | 0 VA | Remaining | 0 VA | 0.00% | 0 VA |
| E | Equipment | | 4,160 VA | 100.00% | 4,160 VA |
| A | Appliance | | 0 VA | 0.00% | 0 VA |
| LC | Load Center (# of... | 0 | 0 VA | 0.00% | 0 VA |

| Phase Balance | |
|---|---|
| 98 % | A-B |
| 94 % | B-C |
| 96 % | C-A |

| Panel Totals | |
|---|---|
| **Connected Load (VA):** | 26,270 VA |
| **NEC Demand Load (VA):** | 20,215 VA |
| **Connected Load (A):** | 73 A |
| **NEC Demand Load (A):** | 56 A |
| **Spare Capacity (A):** | 76 A |
| **Spare Capacity (%):** | 76 |

**Notes:**
PROVIDE INTEGRAL SPD
(G) - PROVIDE GFCI TYPE BREAKER

## Branch Panel: P3E

**Location:** IT STORAGE 313
**Supply From:** P3C
**Mounting:** Surface
**Enclosure:** Type 1
**Phase Created:** New Construction
**Volts:** 208Y/120V
**Phases:** 3
**Wires:** 4
**K.A.I.C. Rating:** 10
**Mains Type:** MLO
**Mains / Design Rating:** 100 A
**Bus Rating:** 100 A

| Notes | CKT NO. | Circuit Description | Load Classification | Trip | Poles | A | | B | | C | | Poles | Trip | Load Classification | Circuit Description | CKT NO. | Notes |
|---|---|---|---|---|---|---|---|---|---|---|---|---|---|---|---|---|---|
| | 1 | SPACE | -- | -- | 1 | -- | 480 | | | | | 1 | 20 A | R | REC: REFRIG. 325 | 2 | G |
| G | 3 | REC: GARBAGE DISP325 | R | 20 A | 1 | | | 600 | 600 | | | 1 | 20 A | R | REC: DISHWASHER 325 | 4 | G |
| G | 5 | REC: COFFEE MAKER 325 | R | 20 A | 1 | | | | | 480 | 1,000 | 1 | 20 A | R | REC: MICROWAVE 2 325 | 6 | G |
| G | 7 | REC: MICROWAVE 1 325 | R | 20 A | 1 | 1,000 | 360 | | | | | 1 | 20 A | R | REC: BREAK COUNTER 325 | 8 | |
| | 9 | POWER POLE: FURNITURE 1 | R | 20 A | 1 | | | 1,000 | 540 | | | 1 | 20 A | R | REC: BREAK CAFE 325 | 10 | |
| | 11 | POWER POLE: FURNITURE 2 | R | 20 A | 1 | | | | | 1,000 | -- | 1 | -- | -- | SPACE | 12 | |
| | 13 | REC: COPIER 317C | R | 20 A | 1 | 900 | -- | | | | | 1 | -- | -- | SPACE | 14 | |
| | 15 | SPACE | -- | -- | 1 | | | -- | -- | | | 1 | -- | -- | SPACE | 16 | |
| | 17 | SPACE | -- | -- | 1 | | | | | -- | -- | 1 | -- | -- | SPACE | 18 | |
| | 19 | SPACE | -- | -- | 1 | -- | -- | | | | | 1 | -- | -- | SPACE | 20 | |
| | 21 | SPACE | -- | -- | 1 | | | -- | -- | | | 1 | -- | -- | SPACE | 22 | |
| | 23 | SPACE | -- | -- | 1 | | | | | -- | -- | 1 | -- | -- | SPACE | 24 | |
| | 25 | SPACE | -- | -- | 1 | -- | -- | | | | | 1 | -- | -- | SPACE | 26 | |
| | 27 | SPACE | -- | -- | 1 | | | -- | -- | | | 1 | -- | -- | SPACE | 28 | |
| | 29 | SPACE | -- | -- | 1 | | | | | -- | -- | 1 | -- | -- | SPACE | 30 | |
| | 31 | SPACE | -- | -- | 1 | -- | -- | | | | | 1 | -- | -- | SPACE | 32 | |
| | 33 | SPACE | -- | -- | 1 | | | -- | -- | | | 1 | -- | -- | SPACE | 34 | |
| | 35 | SPACE | -- | -- | 1 | | | | | -- | -- | 1 | -- | -- | SPACE | 36 | |
| | 37 | SPACE | -- | -- | 1 | -- | -- | | | | | 1 | -- | -- | SPACE | 38 | |
| | 39 | SPACE | -- | -- | 1 | | | -- | -- | | | 1 | -- | -- | SPACE | 40 | |
| | 41 | SPACE | -- | -- | 1 | | | | | -- | -- | 1 | -- | -- | SPACE | 42 | |
| | | | | | **Total Load:** | 2,740 VA | | 2,740 VA | | 2,480 VA | | | | | | | |
| | | | | | **Total Amps:** | 23 A | | 23 A | | 21 A | | | | | | | |

| Load Classification | | | Connected Load | Demand Factor | NEC Demand Load |
|---|---|---|---|---|---|
| L | Lighting | | 0 VA | 0.00% | 0 VA |
| C | Continuous | | 0 VA | 0.00% | 0 VA |
| R | Total Receptacle Load | 1st 10,000 VA | 7,960 VA | 100% | 7,960 VA |
| | 7,960 VA | Remaining | 0 VA | 0% | 0 VA |
| M | Total Motor Load | Largest Motor | 0 VA | 0.00% | 0 VA |
| | 0 VA | Remaining | 0 VA | 0.00% | 0 VA |
| E | Equipment | | 0 VA | 0.00% | 0 VA |
| A | Appliance | | 0 VA | 0.00% | 0 VA |
| LC | Load Center (# of... | 0 | 0 VA | 0.00% | 0 VA |

| Phase Balance | |
|---|---|
| 100 % | A-B |
| 91 % | B-C |
| 91 % | C-A |

| Panel Totals | |
|---|---|
| **Connected Load (VA):** | 7,960 VA |
| **NEC Demand Load (VA):** | 7,960 VA |
| **Connected Load (A):** | 22 A |
| **NEC Demand Load (A):** | 22 A |
| **Spare Capacity (A):** | 90 A |
| **Spare Capacity (%):** | 90 |

**Notes:**
PROVIDE INTEGRAL SPD
(G) - PROVIDE GFCI TYPE BREAKER

MARC
Mid-America Regional Council

**MARC PHASE 1 OFFICE RENOVATION**

600 BROADWAY BLVD STE 200,
KANSAS CITY, MO 64105

odimo™

MO CERT OF AUTH.: #2016000414
ODIMO PROJ. #: 211002

**OWNER**
ATTN: CAROL GONZALES,
DIRECTOR OF FINANCE AND ADMINISTRATION
600 BROADWAY, SUITE 200
KANSAS CITY, MO 64105
816.701.8204
CGONZALES@MARC.ORG

**ARCHITECT**
ATTN: AMY J. SLATTERY, AIA
ODIMO LLC
701 E 63RD STREET #210
KANSAS CITY, MO 64110
816.708.1500
ASLATTERY@ODIMO.US

**MEP ENGINEERING**
ATTN: BRAD LEWIS
BRANCHPATTERN, INC.
1508 GRAND BOULEVARD
KANSAS CITY, MO 64108
816.531.2121
BLEWIS@BRANCHPATTERN.COM

**ORIGINAL SHEET ISSUE DATE:** 05/31/2022

| △ | DATE | DESCRIPTION |
|---|---|---|
| 1 | 06/07/2022 | ADDENDUM 01 |

**ISSUE**
**BID / PERMIT SET**
05/31/2022

**SEAL / SIGNATURE**
STATE OF MISSOURI
ABHINAV PANDEY
NUMBER PE-2018015824
PROFESSIONAL ENGINEER
06/07/2022

**DESCRIPTION**
**ELECTRICAL SCHEDULES**

# E301

©2022 **Odimo**

BranchPattern | www.branchpattern.com
PROJECT NUMBER: 1113004
BETTER BUILT ENVIRONMENTS

## KEY NOTES (X) (THIS SHEET)

1. 8" W x 4" D WIRE MESH CABLE TRAY. ROUTE ABOVE FINISHED CEILING OR 6" BELOW STRUCTURE.
2. STUB (1) 2" CONDUIT FROM ACCESSIBLE CEILING TO 18" AFF FOR FURNITURE FEED DATA OULETS.
3. COORDINATE FURNITURE FEED DATA OUTLETS TO ROUTE THROUGH FURNITURE INTEGRATED POWER POLE.
4. CARD READER INFRASTRUCTURE TO BE PROVIDED AS PART OF ADD ALTERNATE 01.

## GENERAL NOTES (THIS SHEET)

1. EXISTING DATA PORTS MARKED AS (E) SHALL BE PROVIDED WITH NEW CABLING, TERMINATION, AND FACEPLACE. EXISTING PATHWAY AND JUNCTION BOX SHALL BE REUSED AND EXISTING CABLING SHALL BE DEMOLISHED.
2. EXISTING DATA PORTS MARKED AS (D) SHALL BE DEMOLISHED. EXISTING CABLING AND FACEPLATE SHALL BE REMOVED. EXISTING PATHWAY AND JUNCTION BOX SHALL REMAIN AND A NEW BLANK COVERPLATE SHALL BE PROVIDED.

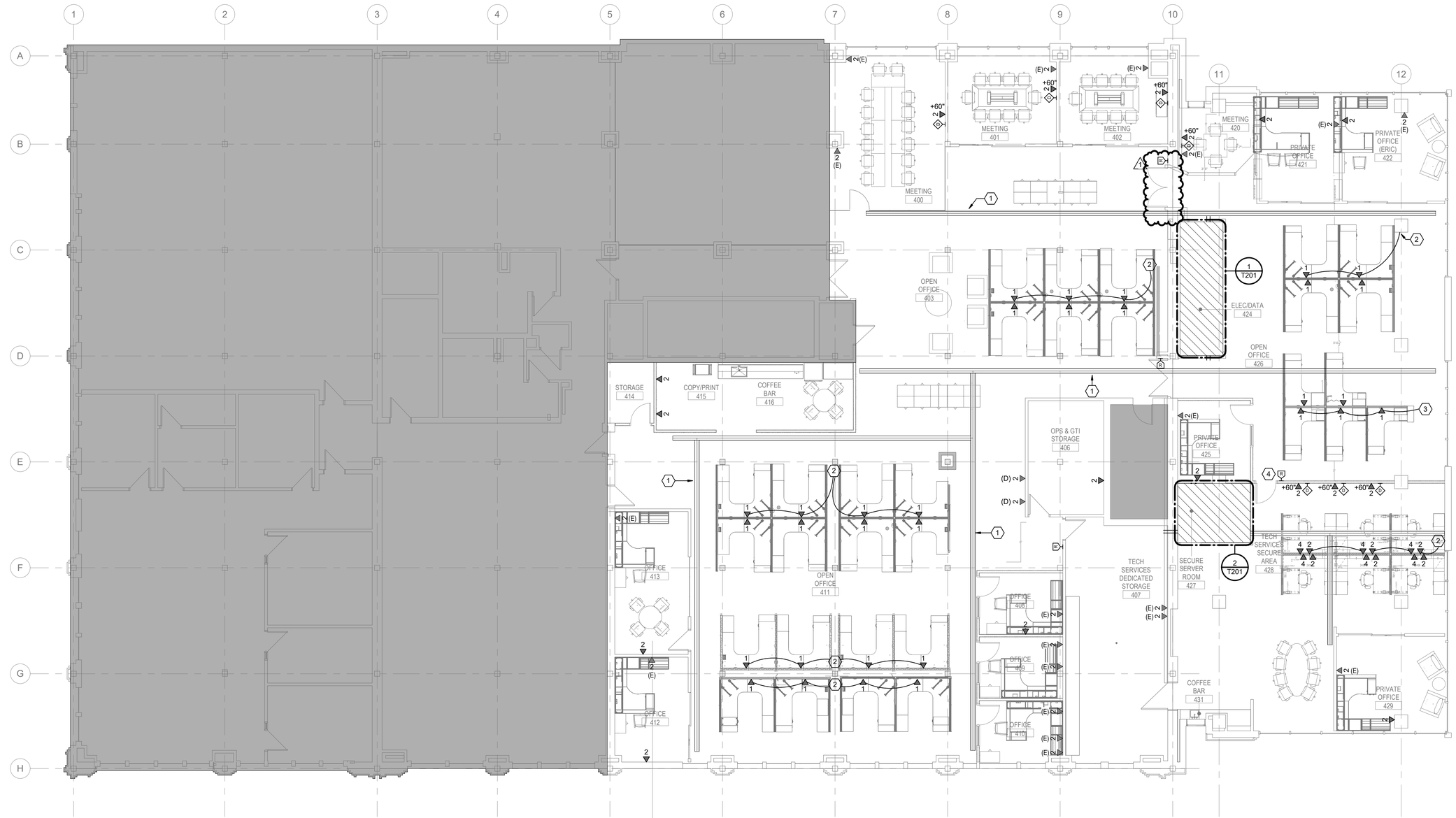


## 1 LEVEL - 04 - TECHNOLOGY PLAN

SCALE: 1/8" = 1'-0"

0' 2' 4' 8'

MARC
Mid-America Regional Council

# MARC PHASE 1 OFFICE RENOVATION

600 BROADWAY BLVD STE 200,
KANSAS CITY, MO 64105

odimo™

MO CERT OF AUTH.: #2016000414
ODIMO PROJ. #: 211002


**OWNER**
ATTN: CAROL GONZALES,
DIRECTOR OF FINANCE AND ADMINISTRATION
600 BROADWAY, SUITE 200
KANSAS CITY, MO 64105
816.701.8204
CGONZALES@MARC.ORG

**ARCHITECT**
ATTN: AMY J. SLATTERY, AIA
ODIMO LLC
701 E 63RD STREET #210
KANSAS CITY, MO 64110
816.708.1500
ASLATTERY@ODIMO.US

**MEP ENGINEERING**
ATTN: BRAD LEWIS
BRANCHPATTERN, INC.
1508 GRAND BOULEVARD
KANSAS CITY, MO 64108
816.531.2121
BLEWIS@BRANCHPATTERN.COM


**ORIGINAL SHEET ISSUE DATE:** 05/31/2022

| △ | DATE | DESCRIPTION |
|---|---|---|
| 1 | 06/07/2022 | ADDENDUM 01 |

**ISSUE**

**BID / PERMIT SET**
05/31/2022

**SEAL / SIGNATURE**

STATE OF MISSOURI
ABHINAV PANDEY
NUMBER PE-2018015824
PROFESSIONAL ENGINEER
06/07/2022

**DESCRIPTION**

**LEVEL 04 - TECHNOLOGY PLAN**

# T104

©2022 Odimo